Section 3
Off Street Parking

30PARKING.DWG

30° PARKING

NOT TO SCALE

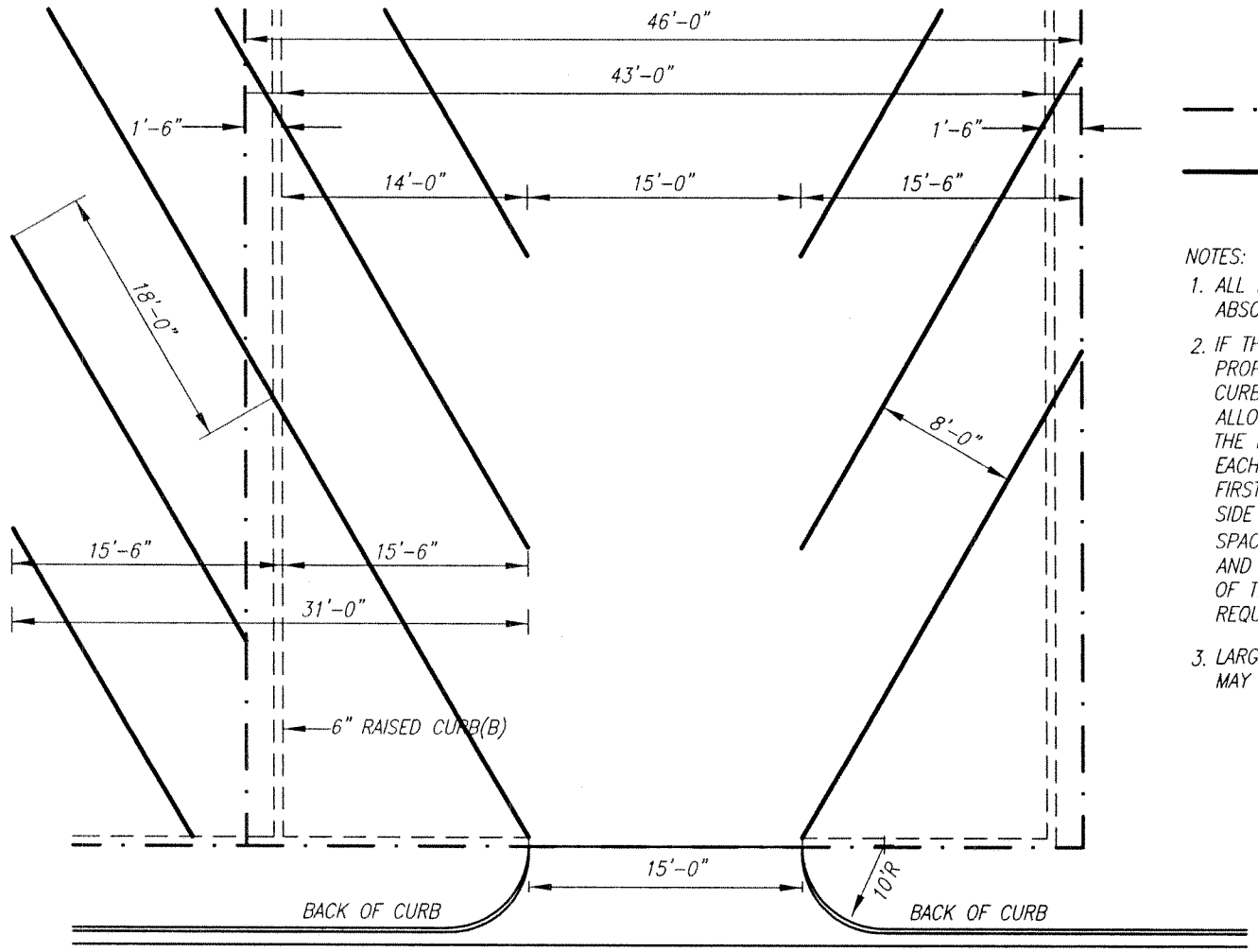

PROPERTY LINES

STALL LINES

NOTES:

1. ALL DISTANCES SHOWN ARE ABSOLUTE DISTANCES
2. IF THE DISTANCES FROM THE PROPERTY LINE TO THE BACK OF CURB IS NOT SUFFICIENT TO ALLOW VEHICLES TO EASILY USE THE FIRST PARKING SPACE ON EACH SIDE OF THE FACILITY, THE FIRST TWO SPACES ON EACH SIDE SHALL BE USED AS OPEN SPACE/TRAFFIC CUEING SPACE AND SHALL NOT COUNT AS PART OF THE CALCULATION OF THE REQUIRED PARKING SPACES
3. LARGER RADI ON MAJOR ROADS MAY BE REQUIRED.

(A) MINIMUM REQUIRED FOR SINGLE ROW OF PARKING.

(B) TOP WIDTH 6"– INCREASE TO 10" IF COMMON BARRIER FOR TWO ROWS OF PARKING.

45PARKING.DWG

45° PARKING

NOT TO SCALE

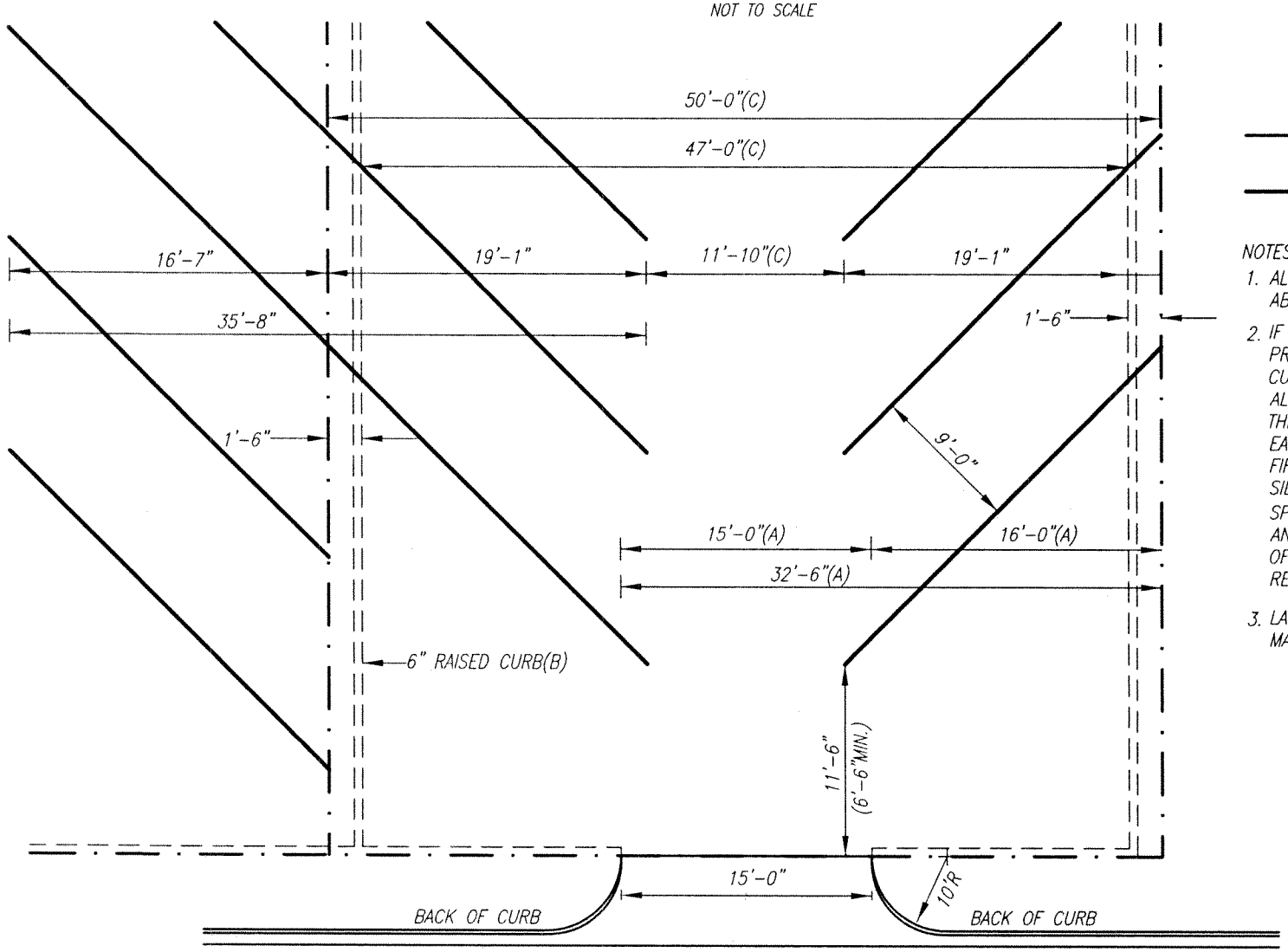

PROPERTY LINES

STALL LINES

NOTES:

1. ALL DISTANCES SHOWN ARE ABSOLUTE DISTANCES
2. IF THE DISTANCES FROM THE PROPERTY LINE TO THE BACK OF CURB IS NOT SUFFICIENT TO ALLOW VEHICLES TO EASILY USE THE FIRST PARKING SPACE ON EACH SIDE OF THE FACILITY, THE FIRST TWO SPACES ON EACH SIDE SHALL BE USED AS OPEN SPACE/TRAFFIC CUEING SPACE AND SHALL NOT COUNT AS PART OF THE CALCULATION OF THE REQUIRED PARKING SPACES
3. LARGER RADI ON MAJOR ROADS MAY BE REQUIRED.

(A) MINIMUM REQUIRED FOR SINGLE ROW OF PARKING.

(B) TOP WIDTH 6"– INCREASE TO 10" IF COMMON BARRIER FOR TWO ROWS OF PARKING.

(C) MINIMUM FOR ONE WAY TRAFFIC IN SHORT LOTS – INCREASE BY 5 FEET FOR TWO WAY TRAFFIC.

60PARKING.DWG

60° PARKING

NOT TO SCALE

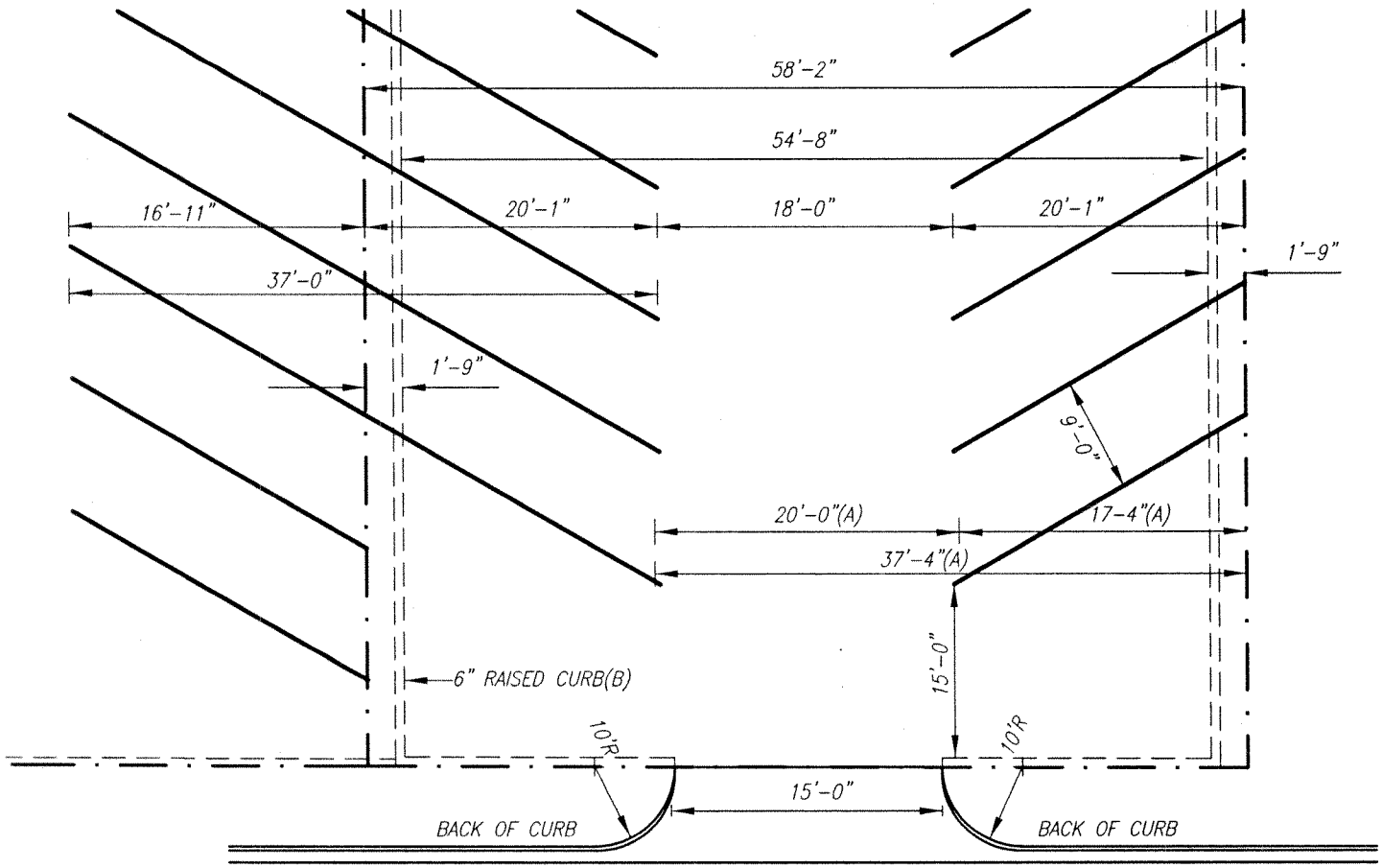

PROPERTY LINES

STALL LINES

NOTES:

1. ALL DISTANCES SHOWN ARE ABSOLUTE DISTANCES
2. IF THE DISTANCES FROM THE PROPERTY LINE TO THE BACK OF CURB IS NOT SUFFICIENT TO ALLOW VEHICLES TO EASILY USE THE FIRST PARKING SPACE ON EACH SIDE OF THE FACILITY, THE FIRST TWO SPACES ON EACH SIDE SHALL BE USED AS OPEN SPACE/TRAFFIC CUEING SPACE AND SHALL NOT COUNT AS PART OF THE CALCULATION OF THE REQUIRED PARKING SPACES
3. LARGER RADI ON MAJOR ROADS MAY BE REQUIRED.

(A) MINIMUM REQUIRED FOR SINGLE ROW OF PARKING.

(B) TOP WIDTH 6"- INCREASE TO 10" IF COMMON BARRIER FOR TWO ROWS OF PARKING.

90PARKING.DWG

90° PARKING

NOT TO SCALE

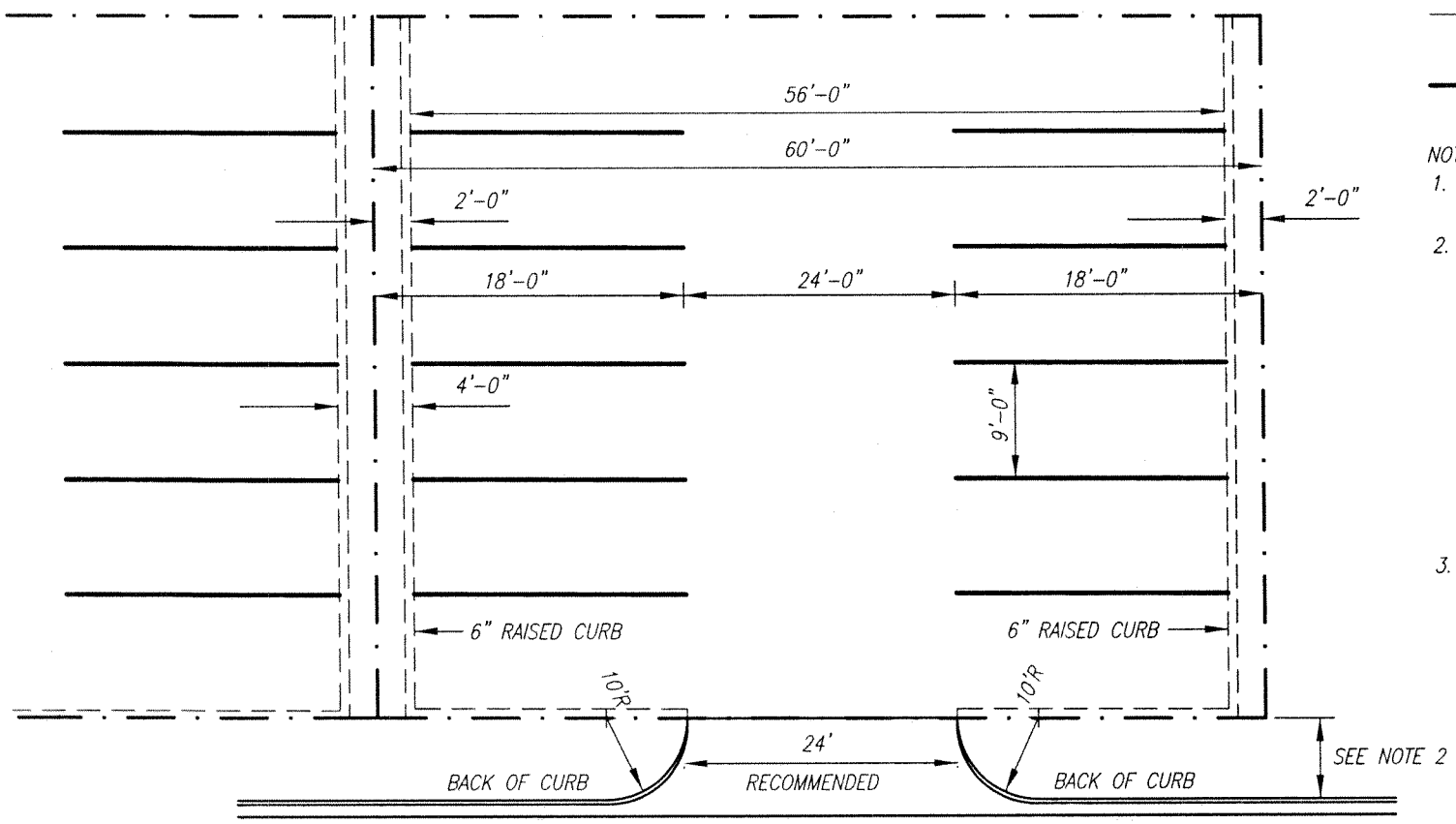

PROPERTY LINES

STALL LINES

NOTES:

1. ALL DISTANCES SHOWN ARE ABSOLUTE DISTANCES
2. IF THE DISTANCES FROM THE PROPERTY LINE TO THE BACK OF CURB IS NOT SUFFICIENT TO ALLOW VEHICLES TO EASILY USE THE FIRST PARKING SPACE ON EACH SIDE OF THE FACILITY, THE FIRST TWO SPACES ON EACH SIDE SHALL BE USED AS OPEN SPACE/TRAFFIC CUEING SPACE AND SHALL NOT COUNT AS PART OF THE CALCULATION OF THE REQUIRED PARKING SPACES
3. LARGER RADI ON MAJOR ROADS MAY BE REQUIRED.

PARKINGBARRRS.DWG

PARKING AREA BARRIERS

NOT TO SCALE

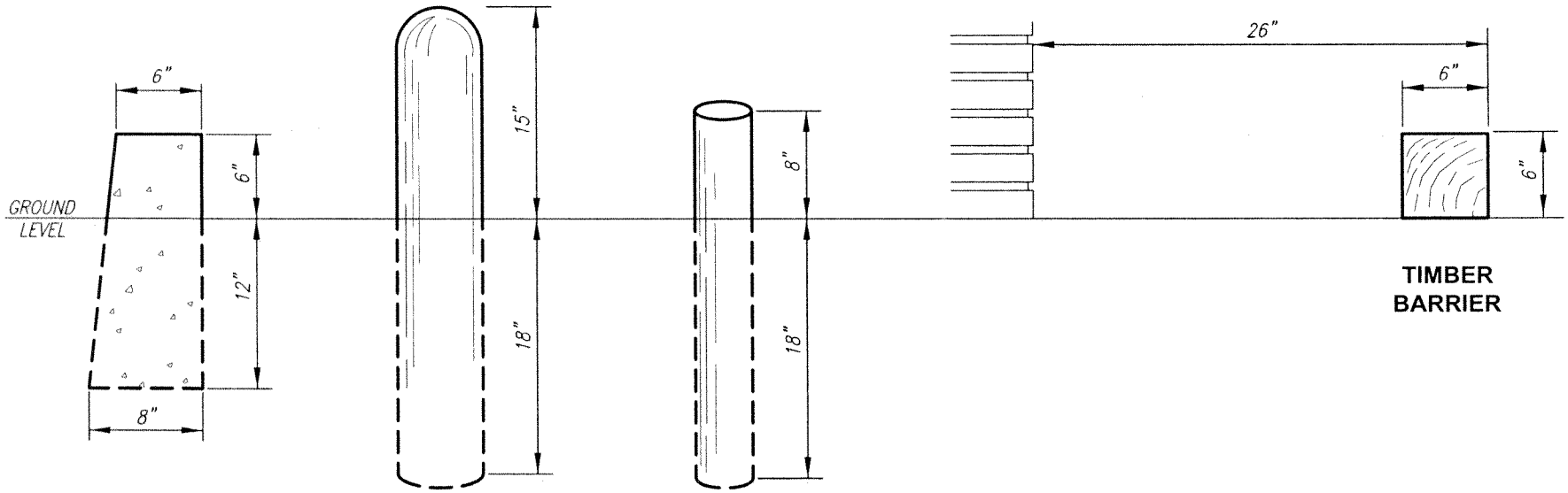

6" REINFORCED CONCRETE CURB

ROUND POST TYPE BARRIER
6" MINIMUM SPACING

PIPE BARRIER
4" DIAMETER
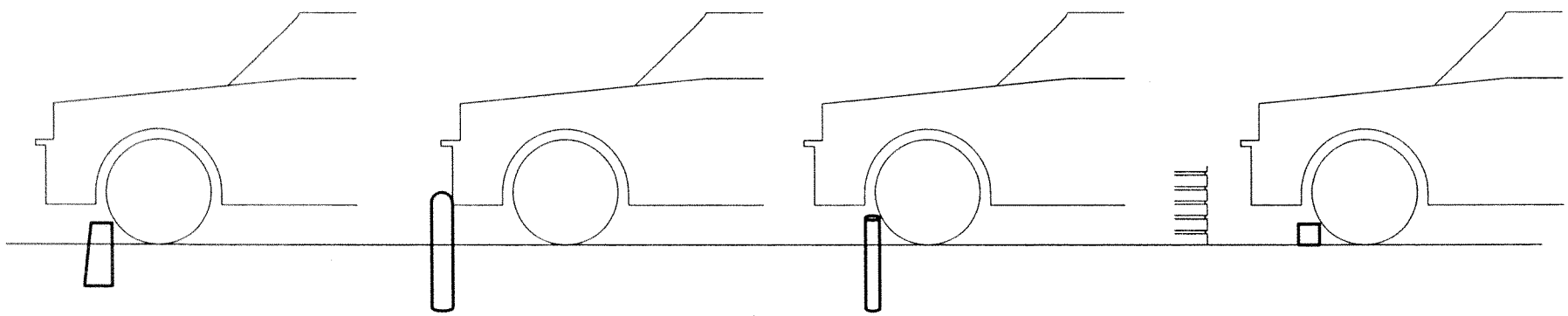
TIMBER BARRIER