City of Belton

DESIGN MANUAL • STANDARD DETAILS

DRAFT

2016

GENERAL REQUIREMENTS

Authority

Pursuant to Section 20-79 of the City of Belton Code of Ordinances, construction of infrastructure is regulated by this Design Manual. This Design Manual is intended to standardize design parameters and construction details in the City of Belton, Texas and the extraterritorial jurisdiction (ETJ) areas of the City. Modifications or departures from these standards shall be identified and supported using sound technical data. All departures and/or modifications to this document must receive final acceptance by the City Engineer.

Pursuant to Section 20-80 of the City of Belton Code of Ordinances, the Department of Public Works can apply additional requirements. All work shall be performed under the supervision of the City Engineer and Department of Public Works in such a manner and such times as the City Engineer and Department of Public Works shall prescribe and approve.

General

All topographic, horizontal and vertical data used in the design process shall be based on the City of Belton current Williams-Stackhouse, Inc., maps including elevation and coordinate data.

Changes in State and/or Federal regulations or standards may require modifications to the information contained herein. The user should always be aware of current regulations prior to using this document for design and construction purposes and is responsible for compliance with the most current State and Federal regulations. The most stringent rule or requirement will govern.

Revisions to this manual may be adopted periodically. The latest version will be available on the City's website at www.BeltonTexas.gov.

The warranty for all completed infrastructure shall be two (2) years from the date of final acceptance by the City of Belton, Texas.

Construction activities shall be coordinated with City's On-site Representative 48 hours prior to commencing. A pre-construction meeting may be required by the City Engineer before beginning construction.

Use, Modification and Approved Equals

The use of these standards shall be under the supervision and seal of a licensed professional engineer in the State of Texas. Any modification to these standard specifications and drawings shall be clearly noted on engineering plans and documents prepared under the supervision and seal of a Texas licensed professional engineer. Any deviation from the standard details must be submitted and accepted in writing by the City Engineer. Any substitutions for use as an approved equivalent must be submitted in writing and approved during the Final Plat stage by the City Engineer.

Minimum Standards

The standards, adopted values, parameters and/or other accepted design data published in this Manual are minimum requirements. Existing conditions and project specifics may require a greater standard of care and the actual design and construction materials may need to be enhanced to assure that proposed infrastructure provides acceptable longevity, relative maintenance free status and general public safety and welfare expected of the engineering profession by Texas statutes and the citizens of Belton, Texas.

DRAFT

Table of Contents

1 Transportation

2 Drainage and Stormwater

3 General Utilities

4 Water

5 Wastewater

6 Reserved

DRAFT

SECTION 1 - TRANSPORTATION

1.01 Streets and Roadways

The purpose of this section is to define the general requirements of street rights-of-way, pavement widths, pavement thickness, geometric alignments and construction details. As conditions are encountered beyond the scope of this section, coordination with the City of Belton Public Works Department, and approval of the City Engineer is required to establish new requirements and procedures.

A. Master Plan and Thoroughfare Plan

All street design must be coordinated with the City of Belton Comprehensive Master Plan and Thoroughfare Plan.

The Master Plan and Thoroughfare Plan were developed for orderly growth and major deviations from these plans will not be permitted. Requests for minor deviations from these plans shall be addressed through the platting process.

B. Rights-of-Way (ROW)

Refer to the City of Belton Subdivision Ordinance, Thoroughfare Plan and Rights-of-Way Management Ordinance. Typical Sections are provided with this section to depict those widths. Wider rights-of-way may be required if topography challenges, construction of boulevards or state participation projects are anticipated. Variations of ROW widths, including widening shall be approved by the City Engineer. Also, ROW may be increased or lessened subject to the placement and size of utilities to serve adjacent and connecting properties. Final street section design is subject to City Engineer approval.

C. Geometrics

1. Provision must be made for the extension of arterials, collector streets, and minor streets to provide for circulation of traffic through a subdivision or development; and provisions for local residential streets extensions must be provided to accommodate development.

DRAFT

EXHIBIT 1.1
STREET DESIGN STANDARDS

	Major Arterial	Minor Arterial	Collector	Local/ Residential
Right-of-way	Refer to Typical Section, Thoroughfare Plan, and Subdivision Ordinance		60 - 80 feet	50 feet
Pavement (Curb back to Curb back)	Refer to Typical Section, Thoroughfare Plan, and Subdivision Ordinance		37 - 57 feet	31 or 37 feet
Grade-Maximum	5%	5%	7%	10%
Grade-Minimum	0.75%	0.75%	0.75%	0.50%
Sight Distance-Minimum Design Speed (AASHTO Standard)	80 mph	60 mph	50 mph	40 mph
Horizontal Curvature (Minimum Radius)	1800 feet	1000 feet	450 feet	200 feet
*Radius for Curb Return at Intersections	50 feet	50 feet	40 feet	20 feet

*Radii are a function of the width of the approach street width and the receptacle street width

2. Vertical Curves
   Center line grade changes with an algebraic difference of 2 percent or more shall be connected with vertical curves with a minimum of 200 feet in length. AASHTO design guidelines shall be used to determine the proper vertical curve length based on design speed.

   Whenever a cross slope is necessary or desirable from one curb to the opposite curb, such cross slope shall not exceed twelve (12) inches in thirty-one (31) feet. The more common cross slope for streets is 2%. Pedestrian crosswalks of streets may dictate slopes equal to or less than 2%.

3. Street Intersections
   The most desirable street intersection is 90 degrees. However existing street patterns may necessitate less than perfect conditions. No major street shall intersect any other major street at an angle of less than 60 degrees. No minor street shall intersect a major street at less than 45 degrees. No local residential street shall intersect any other street at less than 60 degrees.

   Curb radii at intersections shall be a minimum of 20 feet for all streets. See Exhibit 1.1 - Street Design Standards Table for radii for the various street classifications. All radii are measured to the back curb.

DRAFT

Where sidewalks are adjacent to the street intersection, pedestrian ramps shall be constructed to City, State, and Federal Standards (see standard details).

4. Culs-de-Sac and Dead-end Streets
   a) The maximum length of a cul-de-sac or dead-end street with a permanent turnaround shall be per the City's subdivision ordinance.

   b) Turnarounds shall have a minimum ROW width of one hundred (100) feet an a minimum forty (40) foot outside radius for single-family and two-family uses, and a minimum right-of-way width of one hundred twenty (120) feet and a minimum fifty (50) foot outside radius for all other uses.

   c) Temporary dead-end streets may be approved by the Planning and Zoning Commission if an adequate all-weather turnaround is provided. "Adequate, all-weather turnaround" is defined as a turnaround that is sufficient size to accommodate fire safety, emergency, medical and sanitation vehicles and is of a construction quality comparable to standard road cross-sections.

5. All streets shall be constructed with 24-inch standard concrete curb and gutter as detailed in this section; exception will be the rural section shown herein.

D. <u>Pavement Specifications</u>

1. Materials
   a) Pavement sections may be a combination of lime stabilization, crushed limestone base and hot mix asphaltic concrete known as flexible pavement. Pavements also may be constructed of reinforced or jointed concrete paving which is known as rigid pavement. No seal coating of new construction will be allowed as a wearing surface.

   b) All crushed limestone base material used shall be Texas Department of Transportation Item 247, Type A Grade 2 or better. The material should be compacted in maximum six-inch lifts to a minimum of 95% of ASTM D 1557 Method D density within 2% of the optimum moisture content. Material sample shall be taken from windrow on-site after processing.

   c) The last course of crushed limestone base material (CLBM) for roadway construction shall receive a single chip seal (seal coat) using prime oil of ACIS-P, CRS-2, CRS-2P or AC 10 at a rate of 0.25 to 0.35 gallons per square yard and aggregate shall be Grade 4 topping rock applied at a rate of 1 cubic yard per 125 square yards. This chip seal shall be installed immediately after the CLBM has passed in-place density and moisture testing in the field. The use of asphalts, oils, and emulsions shall be per the engineer's recommendations and approved by the City Engineer. Prime oil (Type 310 shall be applied at 2% less than the optimum moisture content. Oil shall cure a minimum of 48 hours before asphalt can be laid, or as otherwise approved by the City Engineer. If asphalt emulsion prime is recommended, the mixture shall be 50/50 water to prime ratio by weight.

   d) Hot mix asphaltic concrete surface course material shall be Texas Department of

DRAFT

Transportation Item 340. Type C shall be used on collectors and arterials while Type D shall be used on local/residential streets.

2. Design

a) All pavements shall be designed by a geotechnical engineer or pavement design engineer based on representative soils data taken in the field and that satisfy requirements of this section. Design life for the pavement shall be a minimum of thirty (30) years. The assumptions, formulas and calculations for the pavement design shall be submitted with the geotechnical report and not just the results of those procedures.

b) Groundwater shall be assessed during the geotechnical investigation stage. French drains or under drains shall be considered and designed for all street pavement structures where the groundwater, existing pervious soils, or other conditions prove to be a long term issue for the integrity of the pavement structure. Also, existing subgrade that has very high plasticity indices (40 or higher) will be considered for removal and replacement as part of the overall final pavement design.

c) All pavement designs shall follow those procedures used by the Texas Department of Transportation (TxDOT) or The American Association of State Highway and Transportation Officials (AASHTO) for flexible and rigid pavements. All sub-grade and pavement materials shall be assigned a TxDOT Triaxial Classification for design purposes.

d) Pavement structure behind the curb and gutter shall extend a minimum of twenty-four (24) inches in length at a minimum depth of four (4) inches under curb unless more is recommended by the pavement design engineer.

Street Type	18 – Kip Axle Repetitions *
Major Arterial	1,000,000 to Unlimited
Minor Arterial	1,000,000
Collector	750,000
Local/Residential	250,000
Cul-de-sac	100,000

* Based on traffic counts and projections

e) Natural subgrade – loose or disturbed material beneath pavements to be constructed should be compacted to 95% of ASTM D 698, Method D density in maximum six-inch lifts at optimum moisture.

f) Concrete used for concrete pavements shall have a 28-day compressive strength of 3,600 PSI and a 14-day flexural strength of 500 PSI.

g) Curb and gutter shall cure a minimum of seven (7) days prior to installation of base course.

E. Construction Drawings

DRAFT

All construction drawings shall show the plan view, the profile view, and cross sections of proposed streets at fifty-foot intervals. All plan, profile, and cross section plans shall be labeled with mean sea level elevations, 100-year water surface elevations, percent slopes, top of curb elevations (top of pavement elevations), and all effective dimensioning as approved by the City Engineer. All radii returns and cul-de-sac improvements shall be shown with designed elevations at the Point of Curvature, Point of Tangency and regular locations along the edge of pavement or curb lines as approved by the City Engineer. Stop bars and markings are required and shall be shown on the plans.

F. Signage

1. Street signs shall be required at all intersections. Signs shall conform to current City sign standards and the standards set forth in the current Texas Manual on Uniform Traffic Control Devices for Streets and Highways.

   a) Sign colors shall be approved by the City Engineer.
   b) Street signs shall have 9-inch blades with 6-inch letters on street names. In addition to the street name, the street type (Street – ST, Drive – DR, Boulevard – BLVD, Circle – CIR, etc.) and block number shall be identified.
   c) Street sign posts shall be 14-gauge steel, 2-inch round break-away posts with a minimum 30-inch long anchor, unless otherwise approved by the City Engineer.
   d) An additional 'No Outlet' blade is required at intersections with a cul-de-sac or streets with no outlet.
   e) The City will purchase and install all signage per the Fee Ordinance.

1.02 Sidewalks

A. Sidewalks are required in conformance with the Subdivision Ordinance. Sidewalk ramps for handicap access shall be required at each intersection of a sidewalk and a street and comply with current Texas Department of Licensing and Regulation (TDLR) and Americans with Disabilities Act (ADA) Requirements.

B. Construction plans which include pedestrian facilities shall be submitted to the TDLR and receive TDLR approval/certification prior to construction, if applicable.

C. Sidewalks shall conform to the following standards:

1. Be parallel to the right of way line, located in the dedicated right-of-way or permanent access easement;
2. Have a continuing, common, non-slip surface that is not interrupted by steps or abrupt changes in level.
3. Have a gradual adjustment in level when approaching an intersecting street or parking area with a common level at the point of such intersection;
4. Have sidewalk ramps are required at all street intersections including on the "through" street at "T" intersections; and
5. Be doweled into existing curbing, as applicable;
6. Meet current TDLR and ADA Requirements.

D. The area between the curb and the sidewalk shall be excavated or filled to provide a

DRAFT

uniform grade comparable to the adjacent street grade and shall be located so that the ground level at the right-of-way line is no more than two (2) feet, nor less than three (3) inches, above or below the adjacent curb grade.

E. Pedestrian and bicycle facilities shall be constructed in conformance with current City Design Standards. Pedestrian facilities shall have barriers to prevent motor vehicle access, and have bicycle facilities shall have pavement markings in conformance with the current edition of the Texas Manual on Uniform Traffic Control Devices for Streets and Highways.

F. Pedestrian handrails conforming to TxDOT standards are required wherever the grade adjacent to a sidewalk or pedestrian and bicycle facility exceeds 4H:1V with a vertical drop greater than one (1) foot.

G. Variances in texture, grade or alignment must be approved by the Texas Department of Licensing and Regulation (TDLR) prior to consideration of the variance by the City Engineer.

H. A solar flashing light shall be installed on each side of the roadway where a proposed hike and bike trail crosses either a collector, arterial, or industrial.

1.04 Materials Requirements for Transportation Improvements

A. Domestic Products
All iron, steel and manufactured components/materials used in any infrastructure project within the City of Belton or the City of Belton ETJ shall be manufactured in the United States of America. Proof of the manufacturer location shall be provided to the City Engineer prior to installation of components/materials. The City Engineer may waive this requirement when said City Engineer deems the waiver is in the best interest of the City of Belton.

B. Concrete and Reinforcement Items
All concrete shall have a minimum 28-day compressive strength of 3,000 psi unless otherwise noted on the plans, specifications or other written document. Water shall not be added to the concrete after inspection and testing. Placed concrete shall be vibrated when necessary depending on slump, space available for concrete placement and depth of placement. The slump of concrete shall be placed at slumps per the Texas Department of Transportation Specifications for the Construction of Highways, Streets and Bridges under Item 420 with respect to the type of concrete structure being constructed.

DRAFT

Steel reinforcement shall be billeted conforming to ASTM specifications A615 Grade 60 or the latest revision to the ASTM A615 specification. Steel cover from the outside edge of steel to inside face of concrete. Reinforcement shall be adequately supported, spaced and secured before placing the concrete. The reinforcement support system (metal support chairs) shall be as manufactured by Dayton Superior, CHCP or CHCV, or equivalent and as noted in the details of the Transportation Section. Reinforcing steel shall be placed in accordance with ACI Standards with overlaps of 40 bar diameters. Rebar chairs shall be placed on 48-inch maximum spacing each way.

1.05 Traffic Control Plans

Traffic Control Plans are required for all collectors or arterials that are affected and may be required for local streets as requested by the City Engineer. Traffic Control Plans shall conform to the following requirements:

1. Plans must conform to current Texas Manual on Uniform Traffic Control Devices (TMUTCD);
2. Plans must clearly depict each construction stage or phase;
3. Plans must be designed and signed and sealed by a licensed professional engineer in the State of Texas;
4. Plans must be submitted to the City of Belton and to TxDOT (when appropriate) with construction submittals; and
5. Nighttime road closures require 7-foot tall signage and arrow boards.

DRAFT

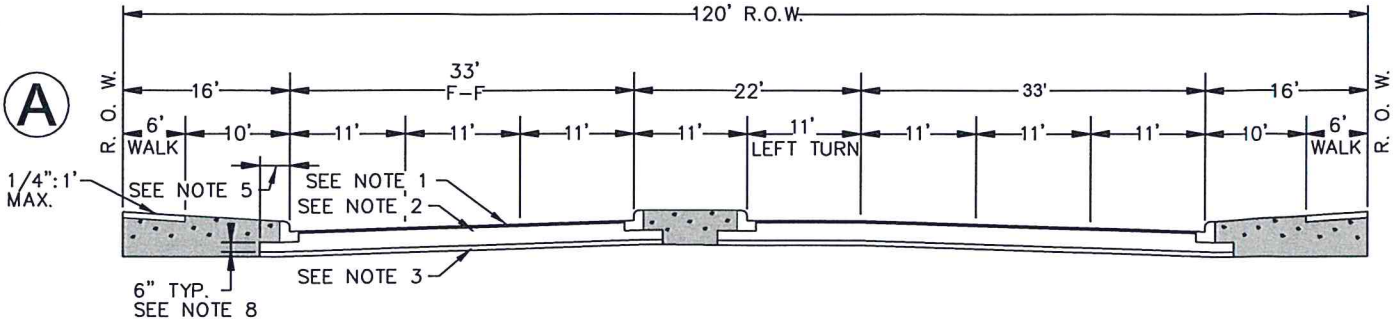

MAJOR ARTERIAL - 6 LANE DIVIDED ROADWAY, NO BIKE LANES, 6' SIDEWALKS

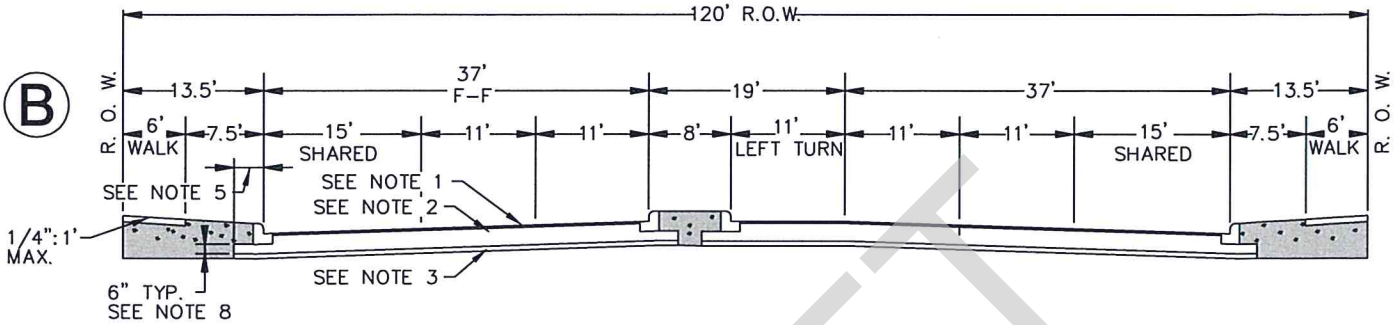

MAJOR ARTERIAL - 6 LANE DIVIDED ROADWAY, SHARED BIKE LANES, 6' SIDEWALKS

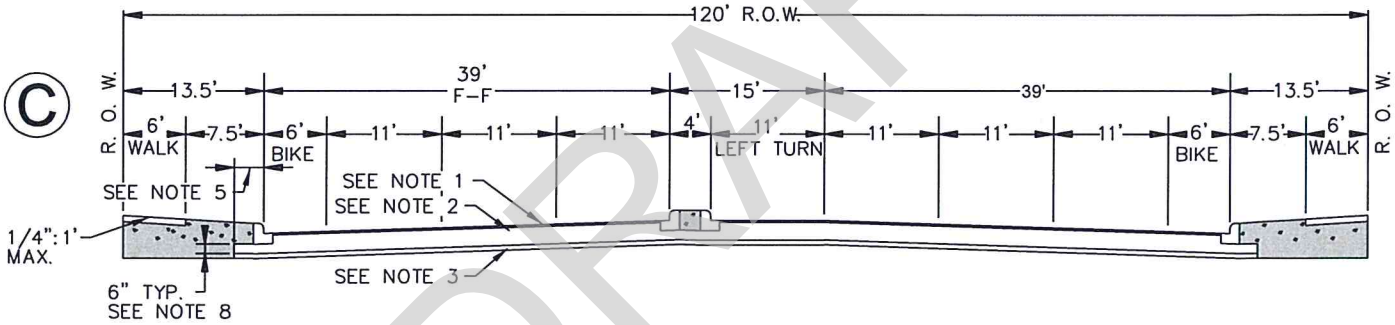

MAJOR ARTERIAL - 6 LANE DIVIDED ROADWAY, 6' BIKE LANES, 6' SIDEWALKS

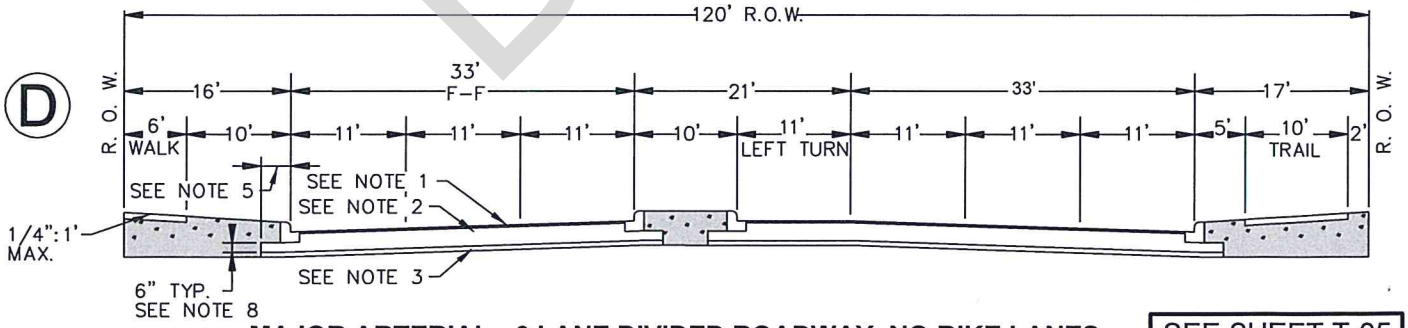

MAJOR ARTERIAL - 6 LANE DIVIDED ROADWAY, NO BIKE LANES, 6' SIDEWALK ON ONE SIDE, 10' HIKE AND BIKE TRAIL ON OTHER SIDE

SEE SHEET T-05 FOR NOTES

DRAFT

CITY OF BELTON, TEXAS

DEPARTMENT OF PUBLIC WORKS

TYPICAL SECTIONS MAJOR ARTERIAL

CONSTRUCTION STANDARDS AND DETAILS

T-01

SCALE: N.T.S.

ISSUE DATE: XXX

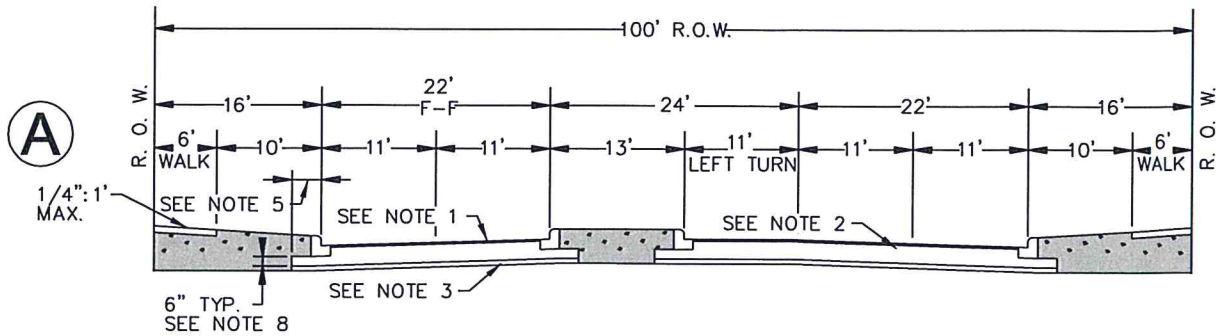

MINOR ARTERIAL - 4 LANE DIVIDED ROADWAY, NO BIKE LANES, 6' SIDEWALKS

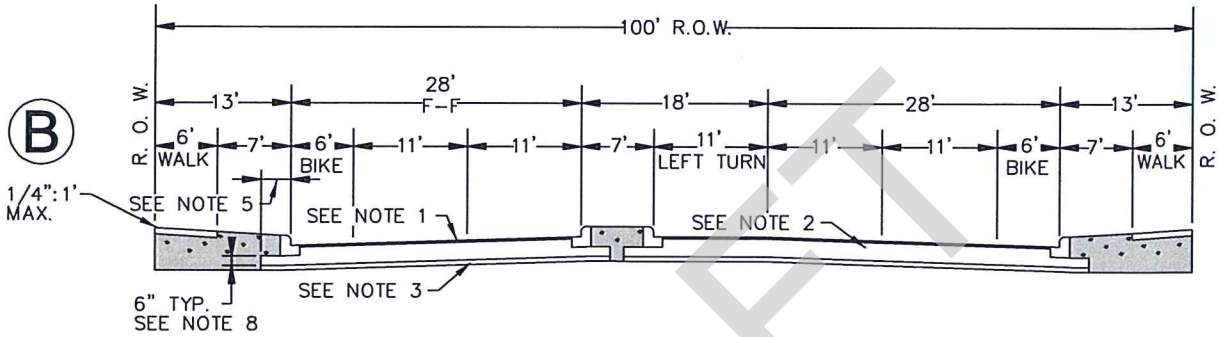

MINOR ARTERIAL - 4 LANE DIVIDED ROADWAY, 6' BIKE LANES, 6' SIDEWALKS

DRAFT

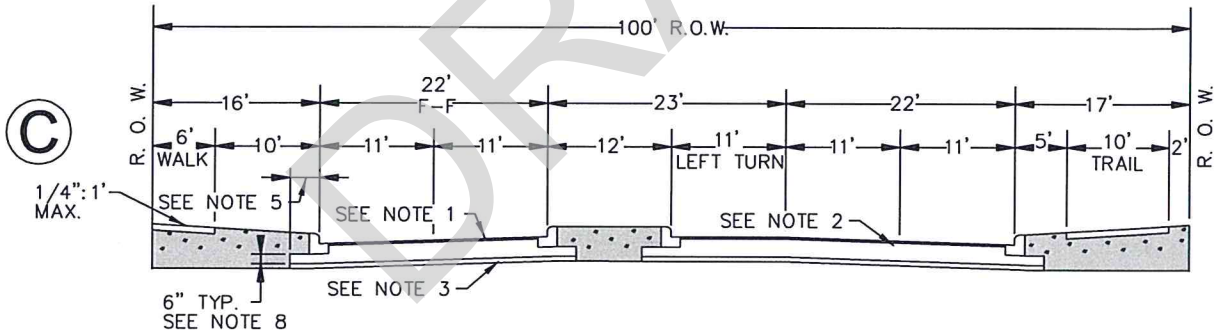

MINOR ARTERIAL - 4 LANE DIVIDED ROADWAY, NO BIKE LANES, 6' SIDEWALK ON ONE SIDE, 10' HIKE AND BIKE TRAIL ON OTHER SIDE

SEE SHEET T-05
FOR NOTES

CITY OF BELTON, TEXAS

DEPARTMENT OF PUBLIC WORKS

TYPICAL SECTIONS
MINOR ARTERIAL

CONSTRUCTION STANDARDS AND DETAILS

T-02
SCALE: N.T.S.
ISSUE DATE: XXX

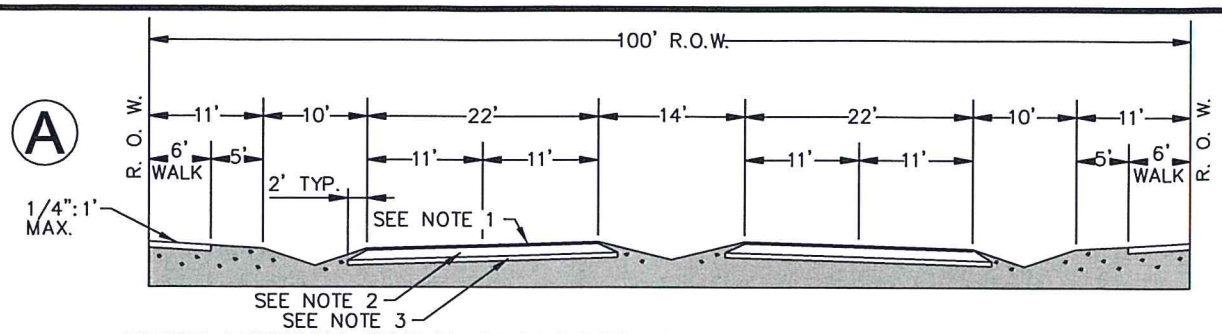

MINOR ARTERIAL (RURAL CROSS SECTION) - 4 LANE DIVIDED ROADWAY, NO BIKE LANES, 6' SIDEWALKS

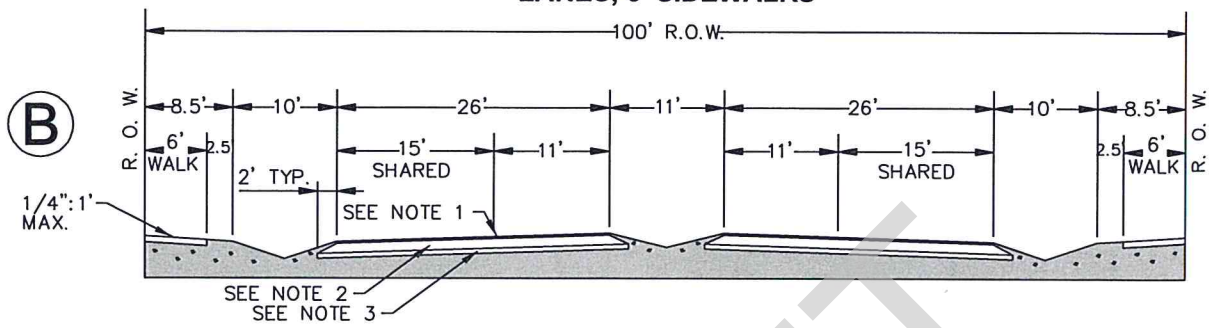

MINOR ARTERIAL (RURAL CROSS SECTION) - 4 LANE DIVIDED ROADWAY, SHARED BIKE LANES, 6' SIDEWALKS

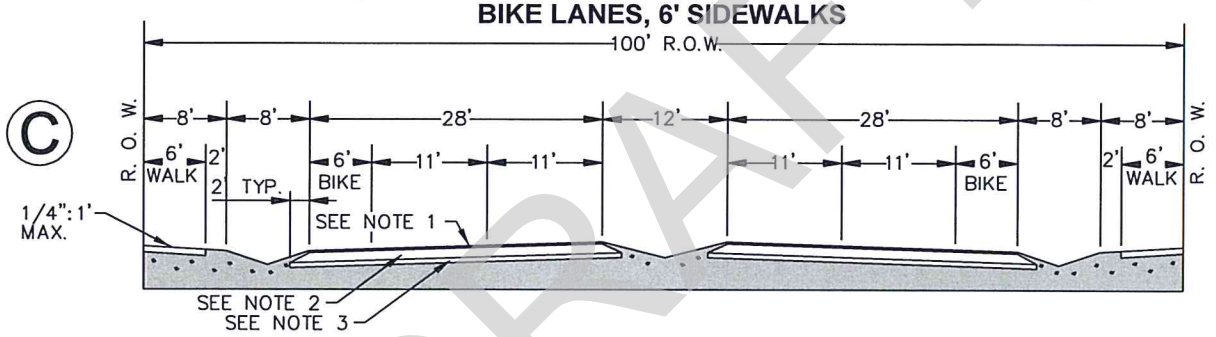

MINOR ARTERIAL (RURAL CROSS SECTION) - 4 LANE DIVIDED ROADWAY, 6' BIKE LANES, 6' SIDEWALKS

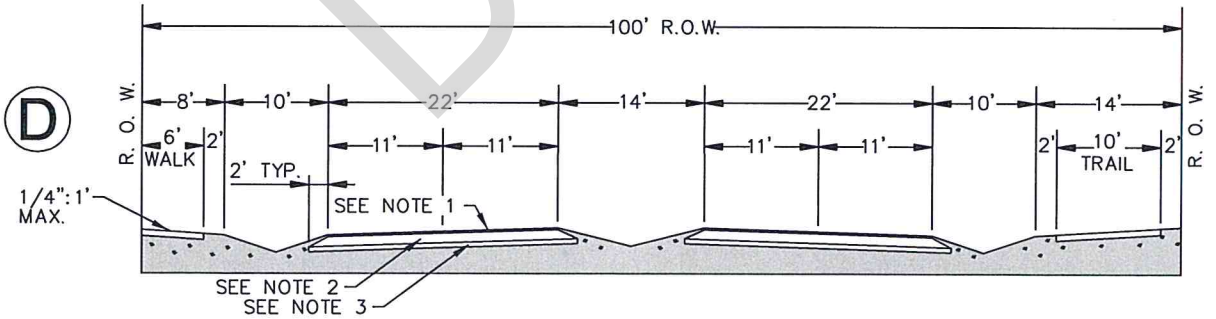

MINOR ARTERIAL (RURAL CROSS SECTION) - 4 LANE DIVIDED ROADWAY, NO BIKE LANES, 6' SIDEWALK ON ONE SIDE, 10' HIKE AND BIKE TRAIL ON OTHER SIDE

SEE SHEET T-05 FOR NOTES

DRAFT

CITY OF BELTON, TEXAS
DEPARTMENT OF PUBLIC WORKS

TYPICAL SECTIONS
MINOR ARTERIAL (RURAL)

CONSTRUCTION STANDARDS AND DETAILS

T-03
SCALE: N.T.S.
ISSUE DATE: XXX

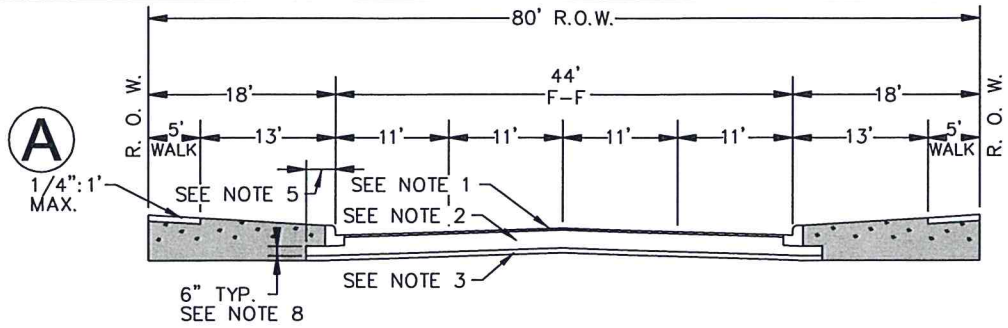

MAJOR COLLECTOR - 4 LANE UNDIVIDED ROADWAY, NO BIKE LANES, 5' SIDEWALKS

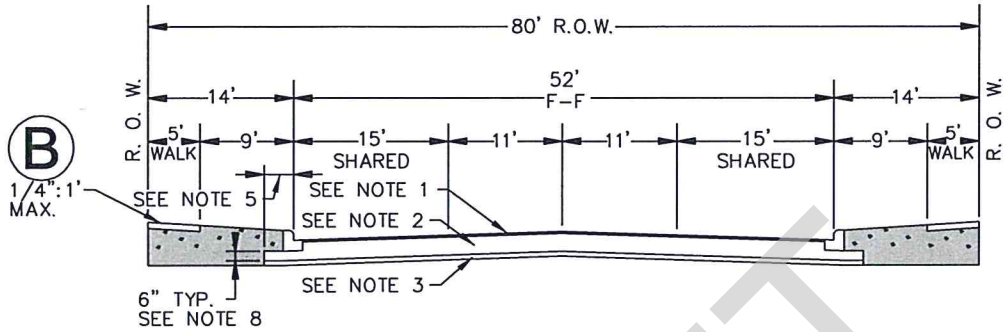

MAJOR COLLECTOR - 4 LANE UNDIVIDED ROADWAY, SHARED BIKE LANES, 5' SIDEWALKS

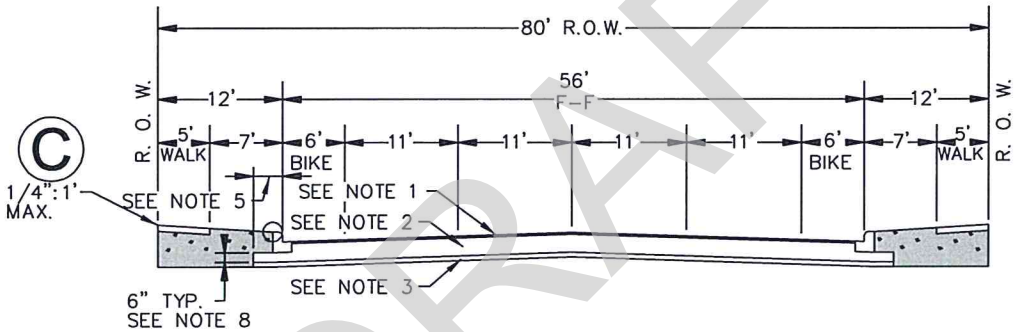

MAJOR COLLECTOR - 4 LANE UNDIVIDED ROADWAY, 6' BIKE LANES, 5' SIDEWALKS

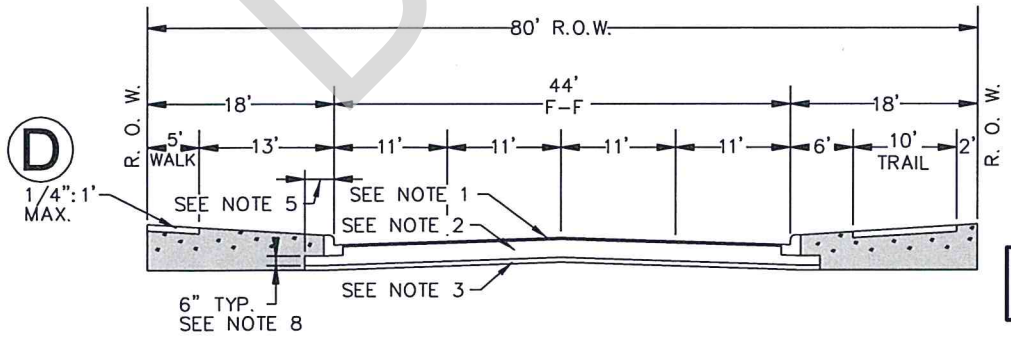

SEE SHEET T-05
FOR NOTES

MAJOR COLLECTOR - 4 LANE UNDIVIDED ROADWAY, 5' SIDEWALK ON ONE SIDE, 10' HIKE AND BIKE TRAIL ON OTHER SIDE

DRAFT

CITY OF BELTON, TEXAS

DEPARTMENT OF PUBLIC WORKS

TYPICAL SECTIONS
MAJOR COLLECTOR

CONSTRUCTION STANDARDS AND DETAILS

T-04
SCALE: N.T.S.
ISSUE DATE: XXX

MINOR COLLECTOR

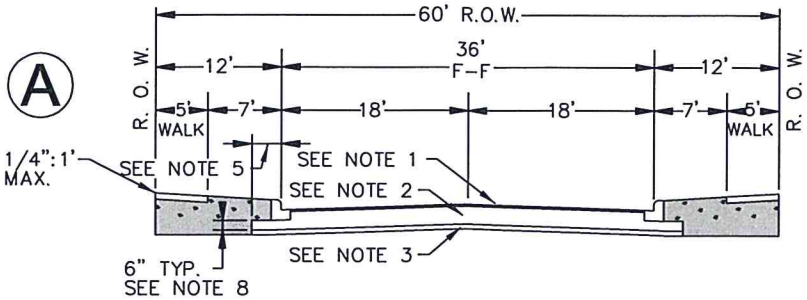

MINOR COLLECTOR - 2 LANE UNDIVIDED, SHARED BIKE LANE, 5' SIDEWALKS

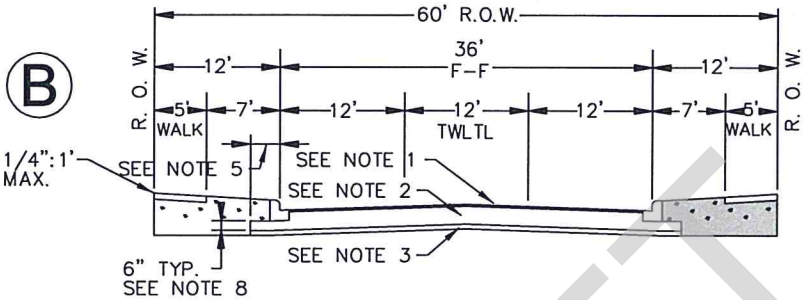

MINOR COLLECTOR - 2 LANE UNDIVIDED W/ TWO-WAY LEFT-TURN LANE (TWLTL), NO BIKE LANES, 5' SIDEWALKS

LOCAL ROADWAY

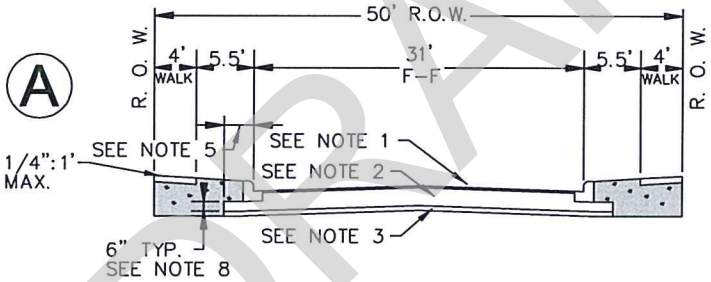

LOCAL ROADWAY - 2 LANE UNDIVIDED, 4' SIDEWALKS

DRAFT

NOTES:

1. MINIMUM 2" TYPE "D" HOT MIX ASPHALTIC CONCRETE FOR LOCAL STREETS. MINIMUM 2" TYPE "C" HOT MIX ASPHALTIC CONCRETE FOR COLLECTORS AND ARTERIALS.
2. FLEXBASE, TXDOT ITEM 247, GRADE 2 OR BETTER, SHALL BE PLACED IN LIFTS NOT LESS THAN FOUR (4) INCHES AND NOT EXCEEDING SIX (6) INCHES COMPACTED DEPTH AND TO A MINIMUM 95% OF THE MAXIMUM DENSITY AS DETERMINED BY ASTM D1557 (METHOD D). THE BASE MATERIAL SHALL BE PLACED AT OPTIMUM MOISTURE ±2%.
3. LIME STABILIZATION OR GEOGRID MAY BE USED TO REDUCE BASE MATERIAL THICKNESS WHEN PRESCRIBED BY A QUALIFIED GEOTECHNICAL REPORT. IF LIME STABILIZATION OR GEOGRID ARE NOT USED, PAVEMENT DESIGNS SHALL HAVE NO LESS THAN 10" OF BASE MATERIAL.
4. COMBINED THICKNESS OF FLEXIBLE BASE COURSE, TREATED SUBGRADE OR SUBBASE SHALL BE AS REQUIRED TO SUPPORT TRAFFIC LOADS AND VOLUME ON SUBGRADE.
5. SUBGRADE/BASE SHALL BE EXTENDED 2'-0" BEHIND CURB FOR ALL STREET SECTIONS, AND SHALL BE COMPACTED.
6. SUBGRADE SHALL BE AT OPTIMUM MOISTURE OR ABOVE PRIOR TO PLACING BASE MATERIAL.
7. ARTERIALS AND MAJOR COLLECTORS SHALL HAVE A 6" PARABOLIC CROWN OR 1/4" PER FOOT STRAIGHT CROWN. PARABOLIC CROWN FOR MINOR COLLECTORS AND LOCAL ROADWAYS SHALL BE 4".
8. NO PAVEMENT SHALL HAVE LESS THAN 8" OF BASE MATERIAL.

CITY OF BELTON, TEXAS
DEPARTMENT OF PUBLIC WORKS

TYPICAL SECTIONS
MINOR COLLECTOR/LOCAL ROADWAY

CONSTRUCTION STANDARDS AND DETAILS

T-05
SCALE: N.T.S.
ISSUE DATE: XXX

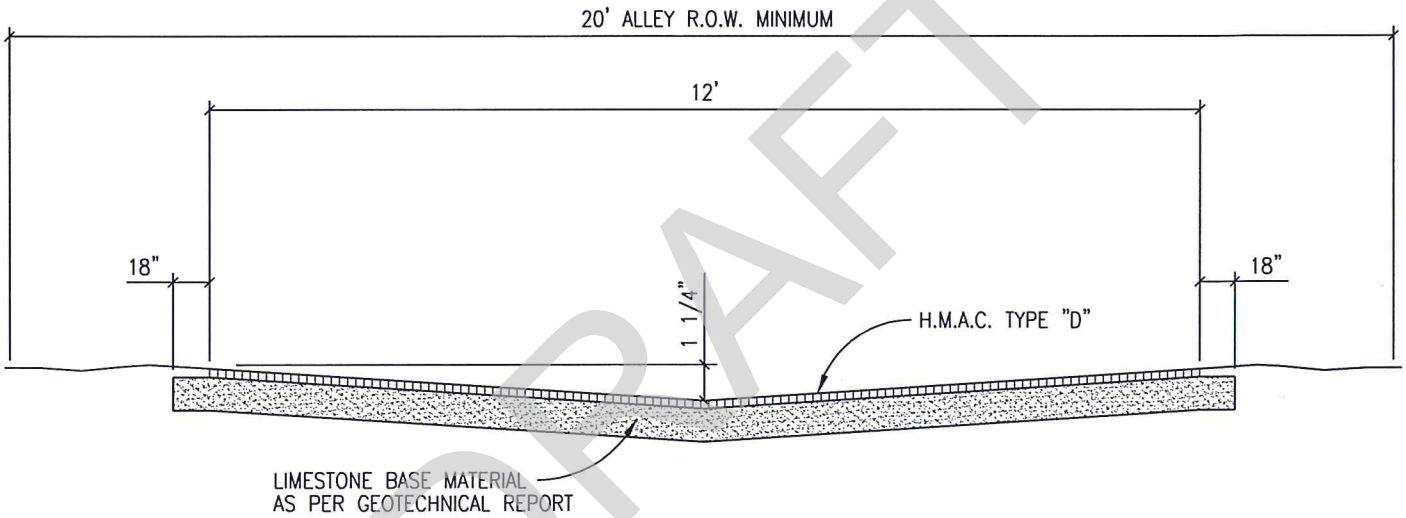

DRAFT

CITY OF BELTON, TEXAS
DEPARTMENT OF PUBLIC WORKS

ALLEY WAYS

CONSTRUCTION STANDARDS AND DETAILS

T-06
SCALE: N.T.S.
ISSUE DATE: XXX

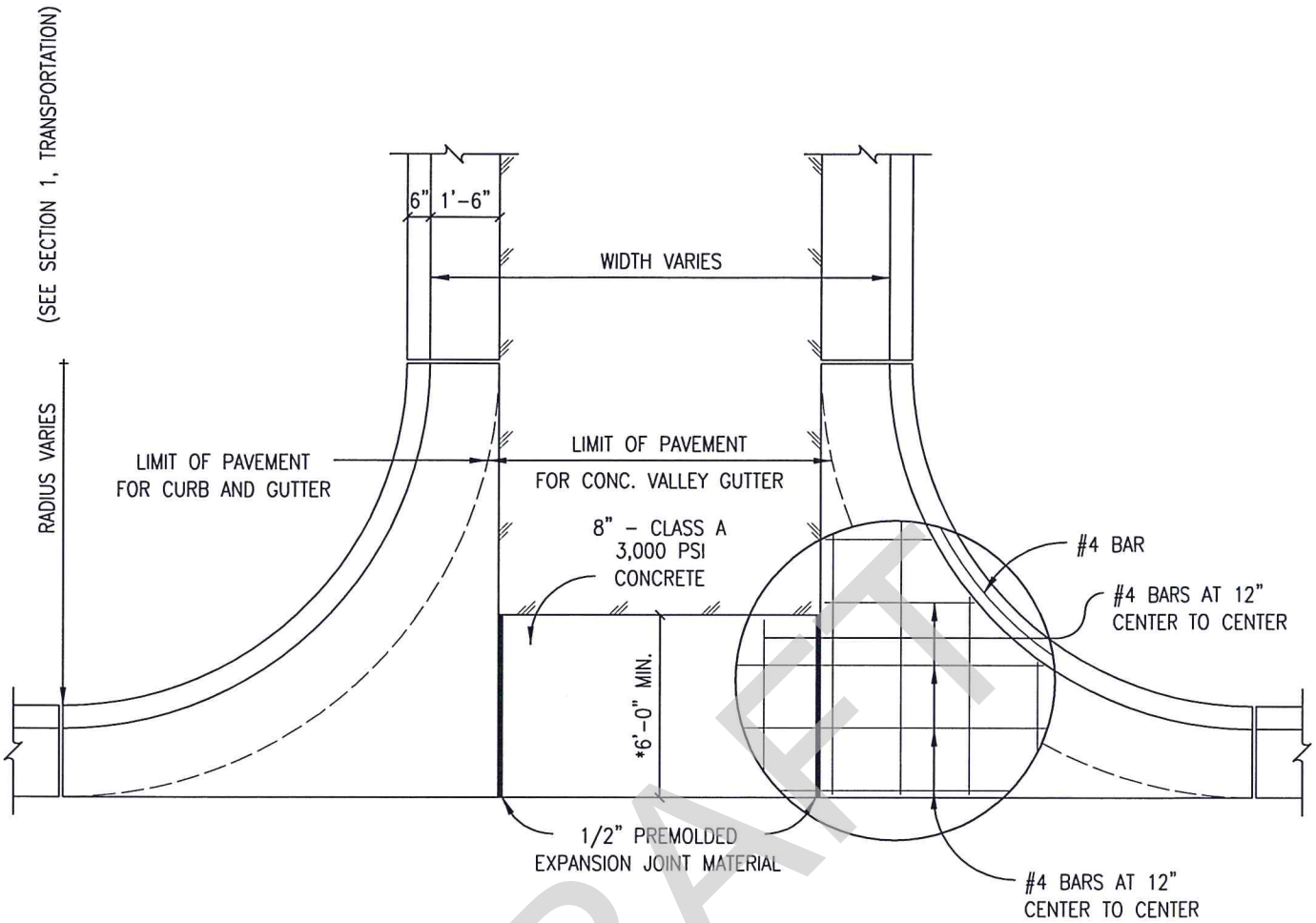

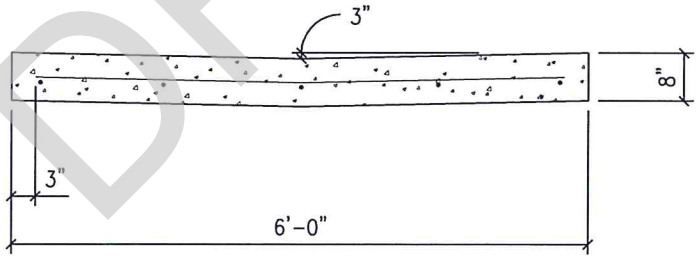

DRAFT

* FOR COLLECTORS AND ARTERIALS, CURB RETURN WIDTHS SHALL EXTEND TO PT OF RADIUS

NOTE:

1. CONCRETE RADIUS UNITS AND CONCRETE VALLEY GUTTERS ARE REQUIRED FOR ALL NEWLY CONSTRUCTED INTERSECTIONS.

CITY OF BELTON, TEXAS

DEPARTMENT OF PUBLIC WORKS

CURB RETURN AND CONCRETE VALLEY GUTTER STANDARD

CONSTRUCTION STANDARDS AND DETAILS

T-07

SCALE: N.T.S.

ISSUE DATE: XXX

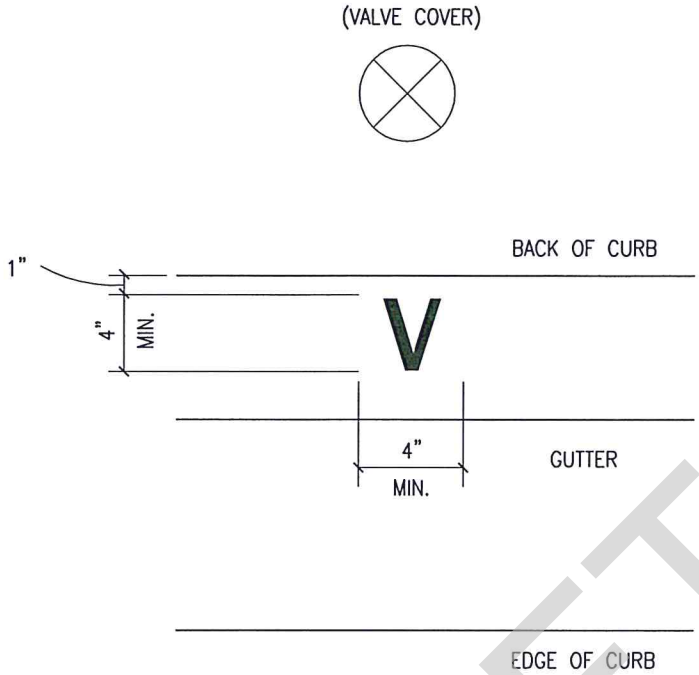

PLAN VIEW
(TYPICAL)

DRAFT

NOTES:

1. ALL WATER SERVICE, WASTEWATER SERVICE, EMPTY CASINGS, AND VALVE LOCATIONS SHALL BE APPROXIMATELY MARKED AS FOLLOWS:

WATER SERVICE	"W"	FACE OF CURB*
WASTEWATER SERVICE	"S"	FACE OF CURB*
VALVE	"V"	FACE OF CURB*
EMPTY CASING	"C"	FACE OF CURB*

2. LETTERS SHALL HAVE A 1/4" – 1/2" STROKE WIDTH.
3. LETTER SHALL BE ETCHED, NOT PAINTED.

* IF NO CURB, INSTALL AND ETCH MARKER IN 1'x1'x 8" CONCRETE BLOCK

CITY OF BELTON, TEXAS
DEPARTMENT OF PUBLIC WORKS

CURB STAMP STANDARD

CONSTRUCTION STANDARDS AND DETAILS

T-08
SCALE: N.T.S.
ISSUE DATE: XXX

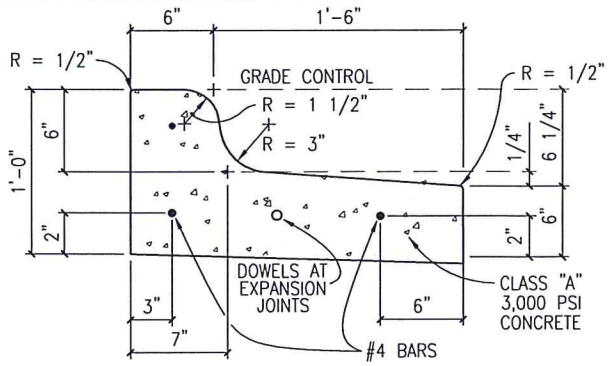

SPILL CURB

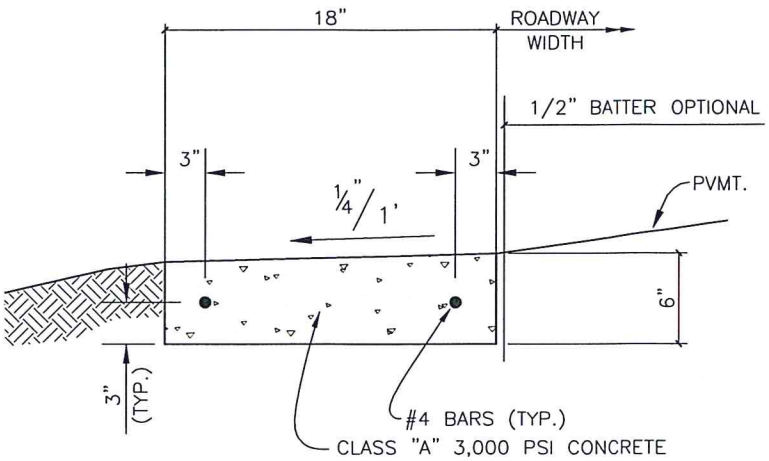

RIBBON CURB

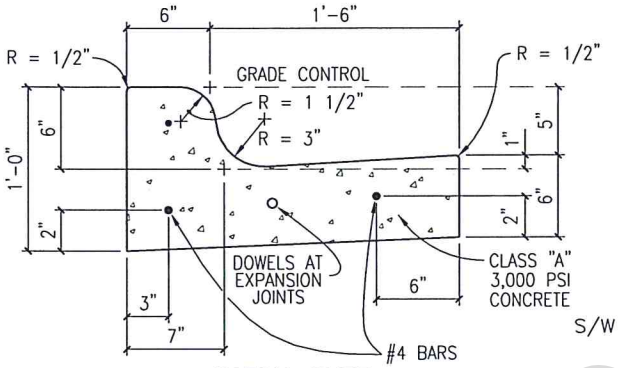

CATCH CURB

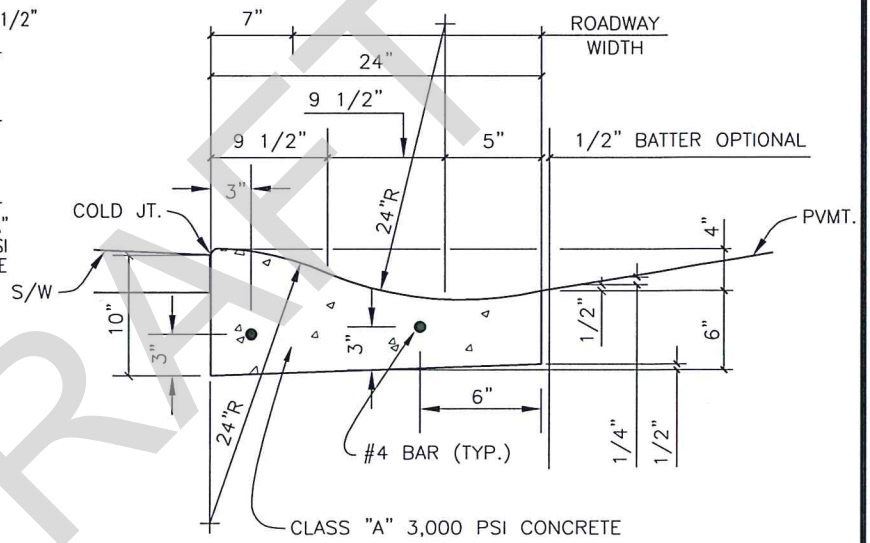

MOUNTABLE CURB*

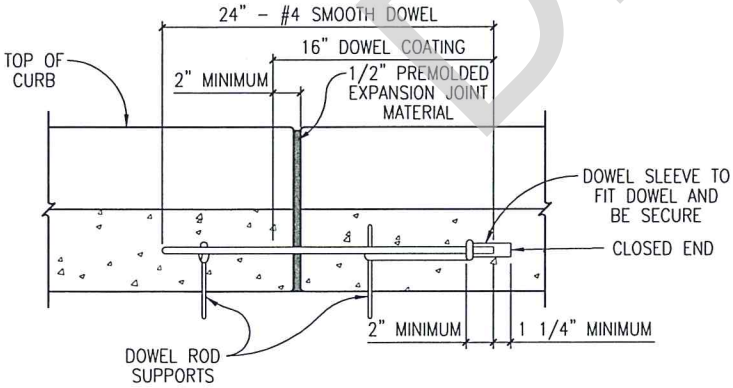

CURB DOWEL DETAIL

* MOUNTABLE CURBS ARE NOT A STANDARD CURB AND WILL ONLY BE APPROVED WHEN DEMONSTRATED THAT SPILL OR CATCH CURBS CANNOT BE INSTALLED.

DRAFT

CITY OF BELTON, TEXAS

DEPARTMENT OF PUBLIC WORKS

CURB AND GUTTER STANDARD

CONSTRUCTION STANDARDS AND DETAILS

T-09

SCALE: N.T.S.

ISSUE DATE: XXX

1. ALL WORK AND MATERIAL SHALL CONFORM TO ASTM A615, A615M, C309, AND D1752. BROOM FINISH EXPOSED SURFACE.

2. CONTRACTION JOINT SPACING 10' MAXIMUM.

3. EXPANSION JOINT MATERIAL AS PER STD. ASTM D-1751, WITH 40' MAX. SPACING.

4. 1/2" EXPANSION JOINT MATERIAL SHALL BE PROVIDED WHERE CURB IS ADJACENT TO SIDEWALK, DRIVE APPROACHES, RIP-RAP, AND RADII.

5. TRANSITIONS BETWEEN CURBS OR DIFFERING CROSS SECTIONS SHALL OCCUR OVER A 20 FOOT LENGTH AS APPROVED BY THE CITY OF BELTON.

6. ALL CONCRETE SHALL BE CLASS A, 3000 PSI.

7. ALL SURFACES THAT ARE CHIPPED OR OTHERWISE DAMAGED DURING CONSTRUCTION SHALL BE REPAIRED OR REPLACED AT THE DISCRETION OF THE DEPARTMENT OF PUBLIC WORKS OR THE CITY'S ONSITE REPRESENTATIVE.

8. CURB AND GUTTER SHALL HAVE LONGITUDINAL REINFORCING BARS AS FOLLOWS: TWO #4 BARS SHALL BE PLACED 2" FROM BOTTOM OF GUTTER. SEE DETAIL BELOW.

9. REINFORCING BARS SHALL BE LAPPED A MINIMUM OF 15 INCH. TRANSVERSE SLOPE OF GUTTER SHALL CONFORM TO ADA REQUIREMENTS AT ALL PEDESTRIAN CROSSINGS.

10. CURB DOWELS SHALL BE AS SHOWN ON T-09.

11. ALL CONCRETE SURFACES SHALL RECEIVE AN APPLICATION OF WHITE PIGMENTED CURING COMPOUND IN ACCORDANCE WITH TxDOT SPECIFICATION ITEM 420, PARAGRAPH J3.

CURB CUT EXAMPLE

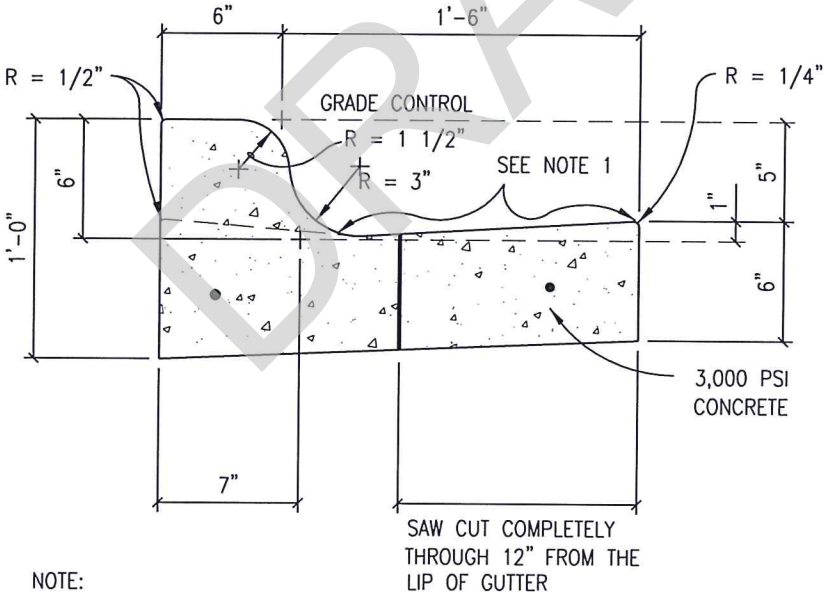

NOTE:

1. IF THE REMAINING CURB AND GUTTER SURFACE IS CHIPPED OR DAMAGED DURING REMOVAL AT THE NEW SAW CUT, THE ENTIRE GUTTER SECTION MUST BE REMOVED.

DRAFT

CITY OF BELTON, TEXAS
DEPARTMENT OF PUBLIC WORKS

CURB AND GUTTER NOTES AND CATCH AND LAYDOWN CURB REMOVAL AT DRIVEWAYS

CONSTRUCTION STANDARDS AND DETAILS

T-10
SCALE: N.T.S.
ISSUE DATE: XXX

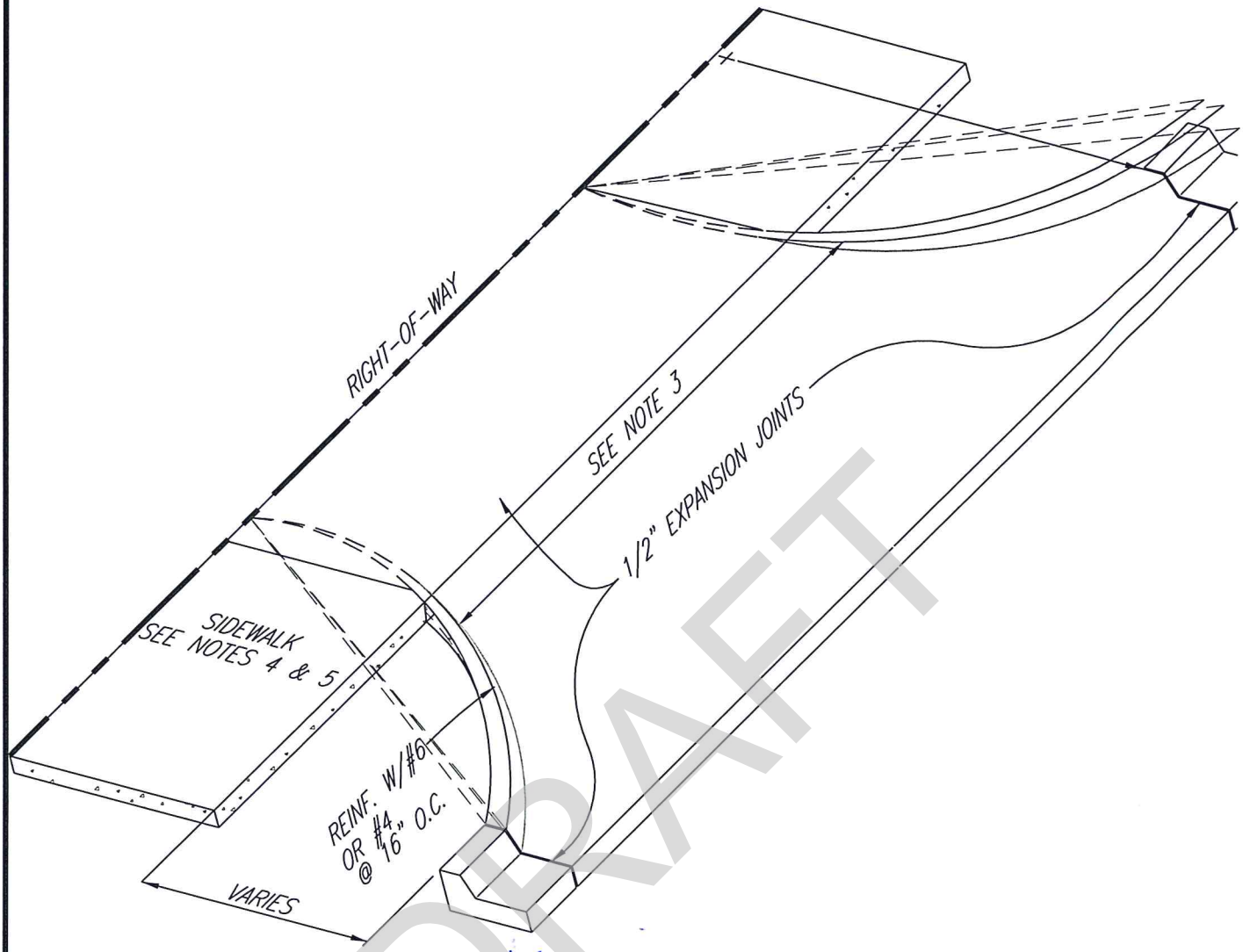

DRAFT

NOTES:

1. DRIVEWAY PERMITS TO BE ACQUIRED FROM THE CITY OF BELTON.
2. SPACING OF DRIVEWAY CUTS SHALL BE AS REQUIRED BY THE CITY ENGINEER.
3. LINEAR "RADIUS" AT CORNERS, PERMITTED FOR "SINGLE FAMILY" OR "TWO FAMILY" RESIDENTIAL DRIVEWAY APPROACH.
4. SIDEWALK LOCATION TO BE APPROVED BY CITY ENGINEER PRIOR TO FINAL DESIGN. (SEE DETAIL, T-32 FOR SIDEWALK TREATMENT AT DRIVEWAYS). SIDEWALK WIDTH SHALL BE BY SUBDIVISION ORDINANCE.
5. SIDEWALK TO BE CONSTRUCTED PER DETAIL T-25, AS APPLICABLE.
6. METAL SUPPORT CHAIRS SHALL BE AS MANUFACTURED BY DAYTON SUPERIOR, CHCP OR CHCV, OR EQUIVALENT.
7. ALL CONCRETE SURFACES SHALL RECEIVE AN APPLICATION OF WHITE PIGMENTED CURING COMPOUND IN ACCORDANCE WITH TXDOT SPECIFICATION ITEM 420, PARAGRAPH J3.

CITY OF BELTON, TEXAS
DEPARTMENT OF PUBLIC WORKS

CONCRETE DRIVEWAY APPROACH

CONSTRUCTION STANDARDS AND DETAILS

T-11
SCALE: N.T.S.
ISSUE DATE:XXX

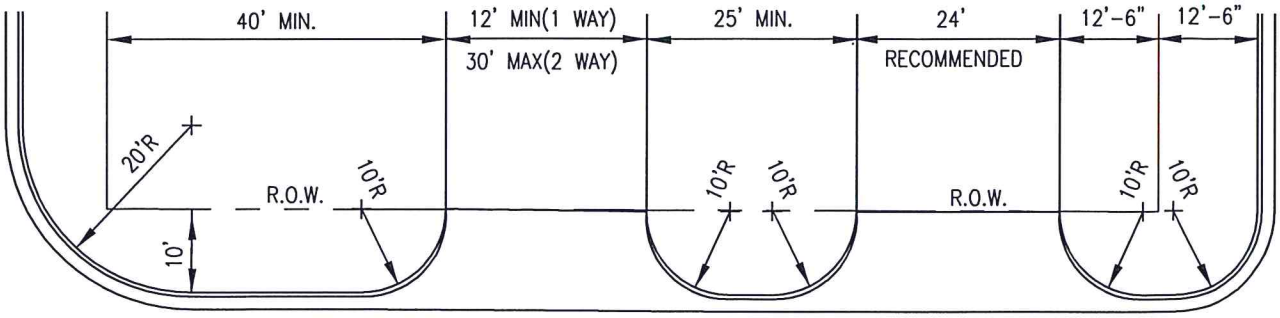

MULTI-FAMILY OR COMMERCIAL
NOT TO SCALE

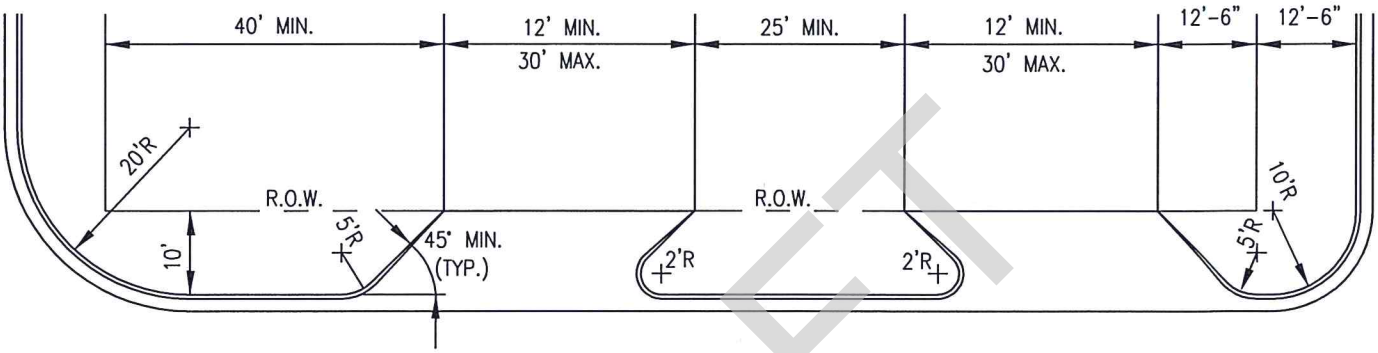

MULTI-FAMILY OR COMMERCIAL ANGLE
NOT TO SCALE

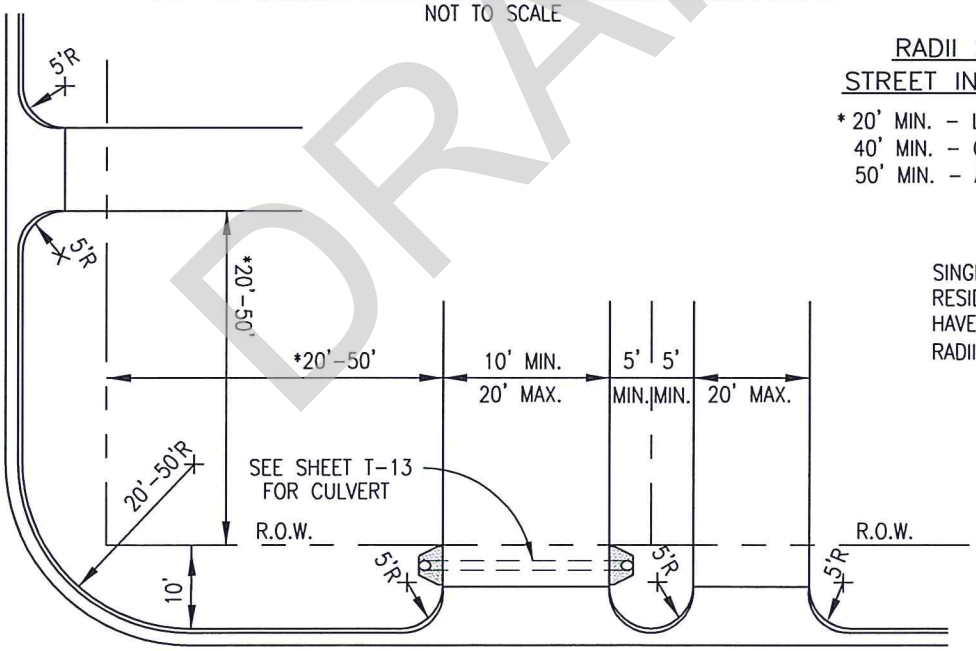

RADII SIZE FOR
STREET INTERSECTIONS

* 20' MIN. – LOCAL STREETS
40' MIN. – COLLECTOR OR
50' MIN. – ARTERIAL STREETS

SINGLE FAMILY
RESIDENTIAL SHALL
HAVE A MAXIMUM
RADII OF 24'.

SINGLE FAMILY ATTACHED & TWO FAMILY RESIDENTIAL
NOT TO SCALE

DRAFT

CITY OF BELTON, TEXAS
DEPARTMENT OF PUBLIC WORKS

CONCRETE DRIVEWAY APPROACHES

CONSTRUCTION STANDARDS AND DETAILS

T-12
SCALE: N.T.S.
ISSUE DATE: XXX

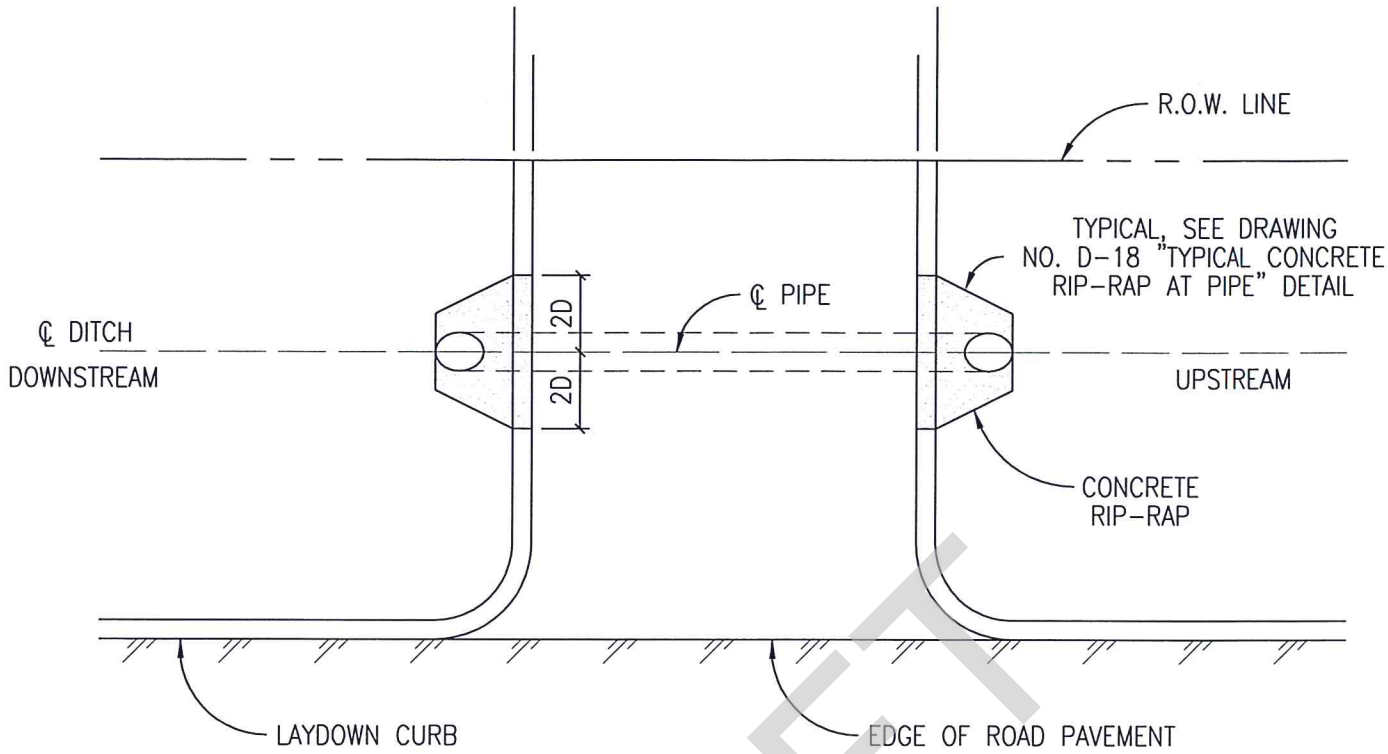

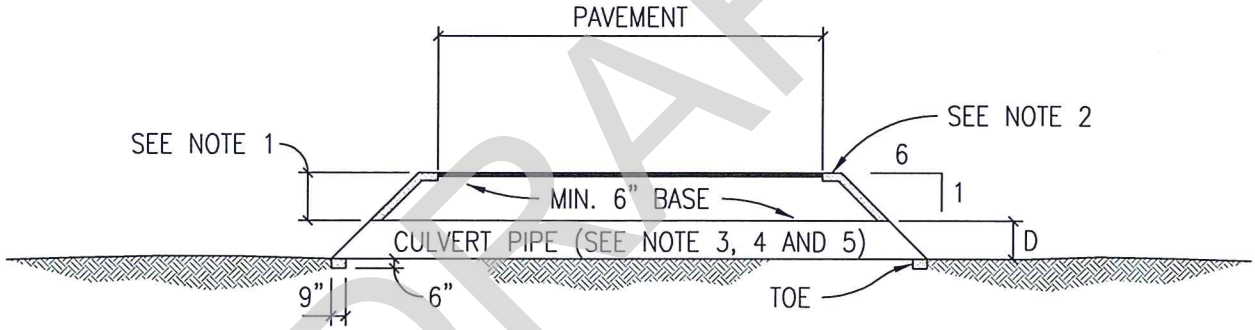

DRAFT

NOTES:

1. MINIMUM COVER OVER CULVERT PIPE SHALL BE 6" (SEE NOTE 5).
2. RIP-RAP SHALL BE INSTALLED. ACCORDING TO D-15.
3. CULVERT PIPE TO BE MINIMUM OF 18" DIAMETER.
4. CULVERT PIPE MATERIAL SHALL BE IN ACCORDANCE WITH DRAINAGE AND SIDEWALK SECTION.
5. MINIMUM COVER OVER CULVERT PIPE SHALL PROVIDE HS-20 LOADING.
6. BACKFILL AROUND CULVERT PIPE SHALL BE SELECT MATERIAL TO BE PLACED AND COMPACTED TO 95% TEX-114E.
7. MINIMUM CHANNEL SIDE SLOPE SHALL BE 6:1.
8. MINIMUM PIPE SLOPE SHALL BE 0.50%.

CITY OF BELTON, TEXAS
DEPARTMENT OF PUBLIC WORKS

DRIVEWAY APPROACH WITH CULVERT PIPE

CONSTRUCTION STANDARDS AND DETAILS

T-13
SCALE: N.T.S.
ISSUE DATE: XXX

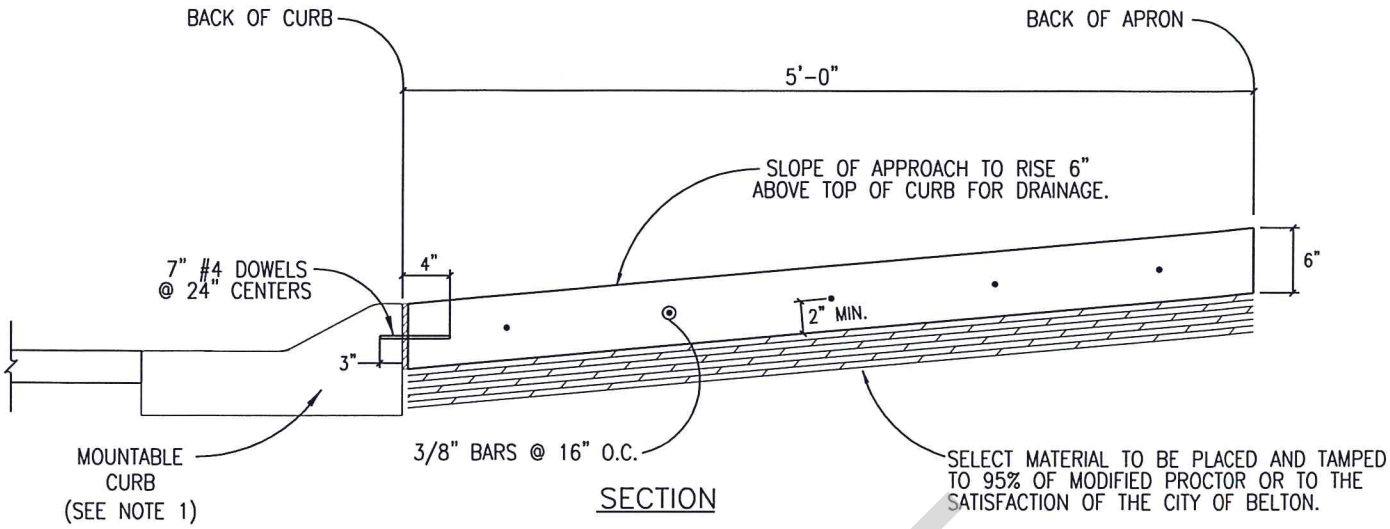

SECTION

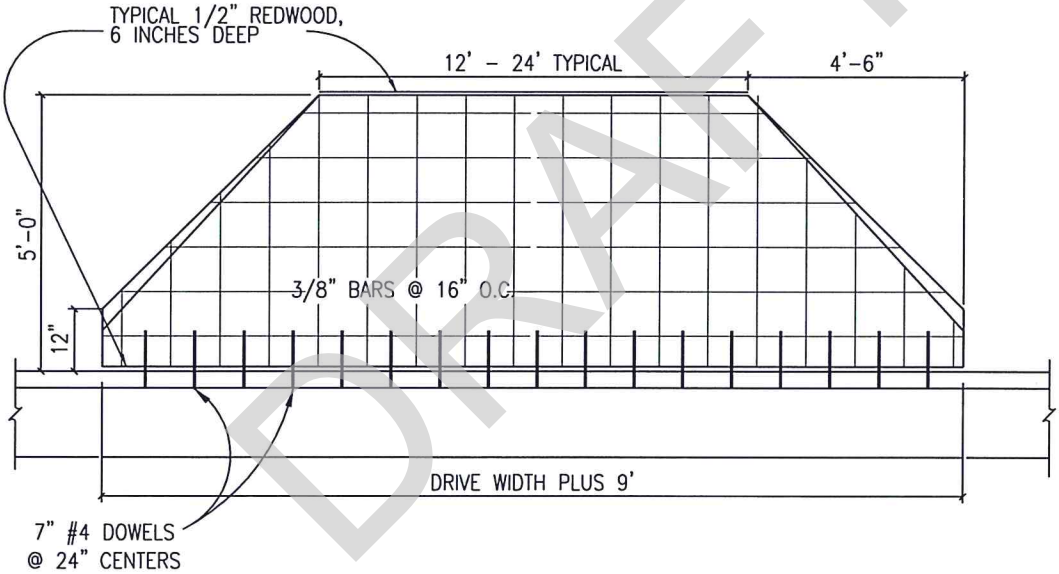

PLAN

DRAFT

NOTE:

1. WHEN CONSTRUCTION OCCURS IN STANDARD CURB AND GUTTER, THE CURB SHALL BE SAWCUT AND REMOVED AT THE GUTTER LINE AND THE DRIVEWAY SHALL BE CONSTRUCTED TO MATCH EXISTING GRADE.

CITY OF BELTON, TEXAS

DEPARTMENT OF PUBLIC WORKS

DRIVEWAY REINFORCEMENT (WINGS & MOUNTABLE CURB) SINGLE AND TWO FAMILY RESIDENTIAL

CONSTRUCTION STANDARDS AND DETAILS

T-14

SCALE: N.T.S.

ISSUE DATE: XXX

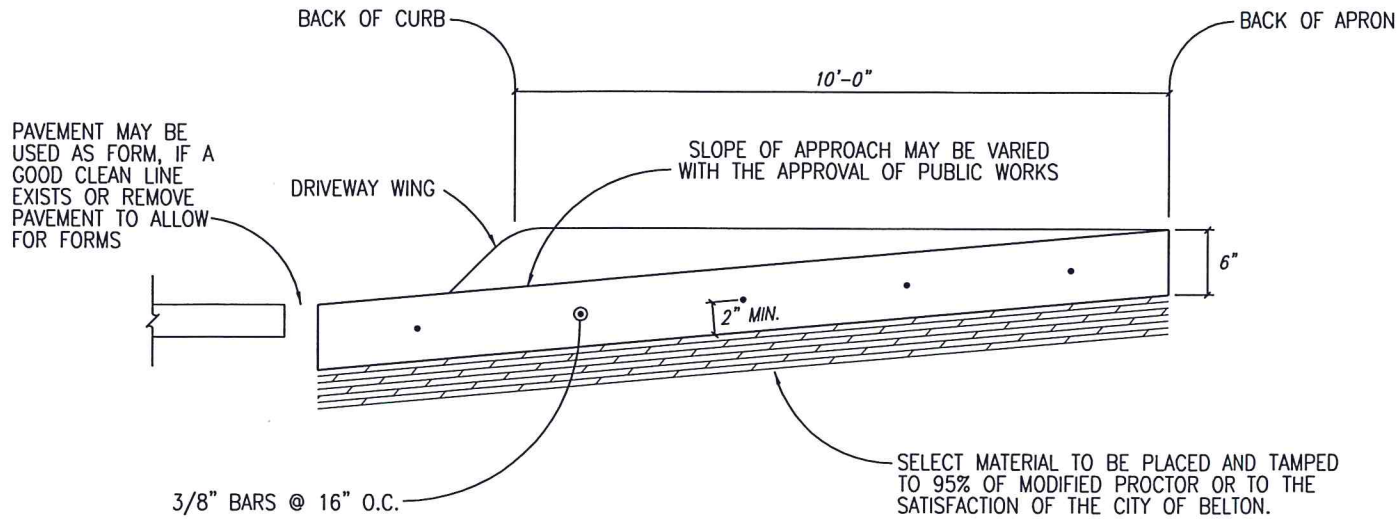

SECTION

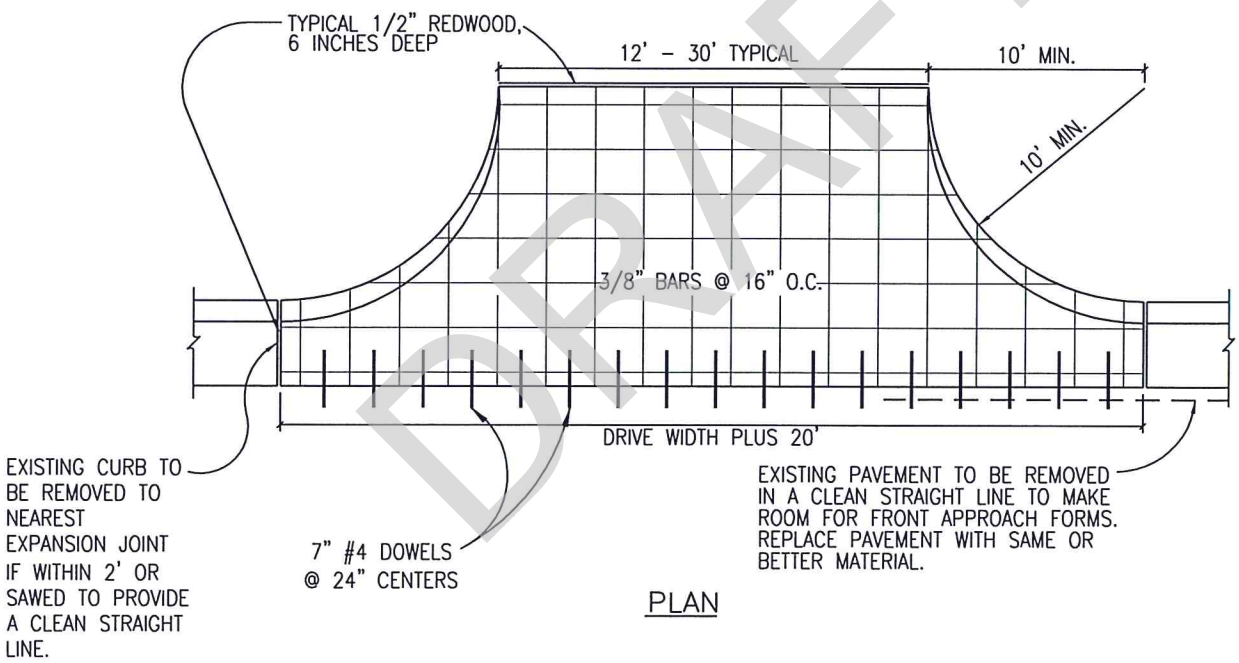

PLAN

DRAFT

CITY OF BELTON, TEXAS

DEPARTMENT OF PUBLIC WORKS

DRIVEWAY REINFORCEMENT
MULTI-FAMILY AND COMMERCIAL

CONSTRUCTION STANDARDS AND DETAILS

T-15
SCALE: N.T.S.
ISSUE DATE: XXX

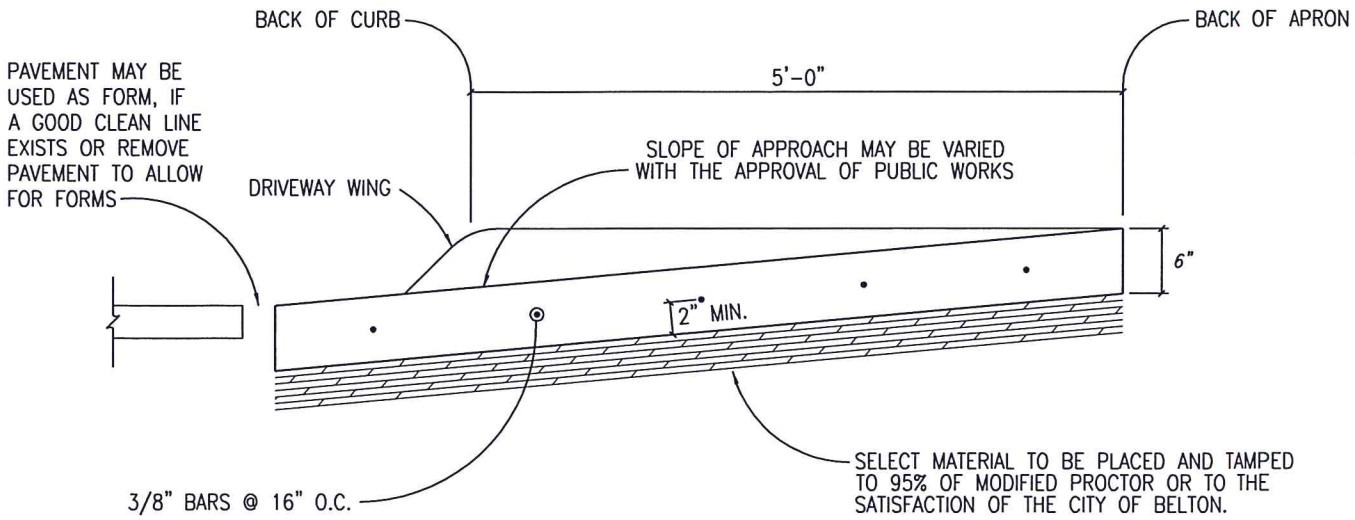

SECTION

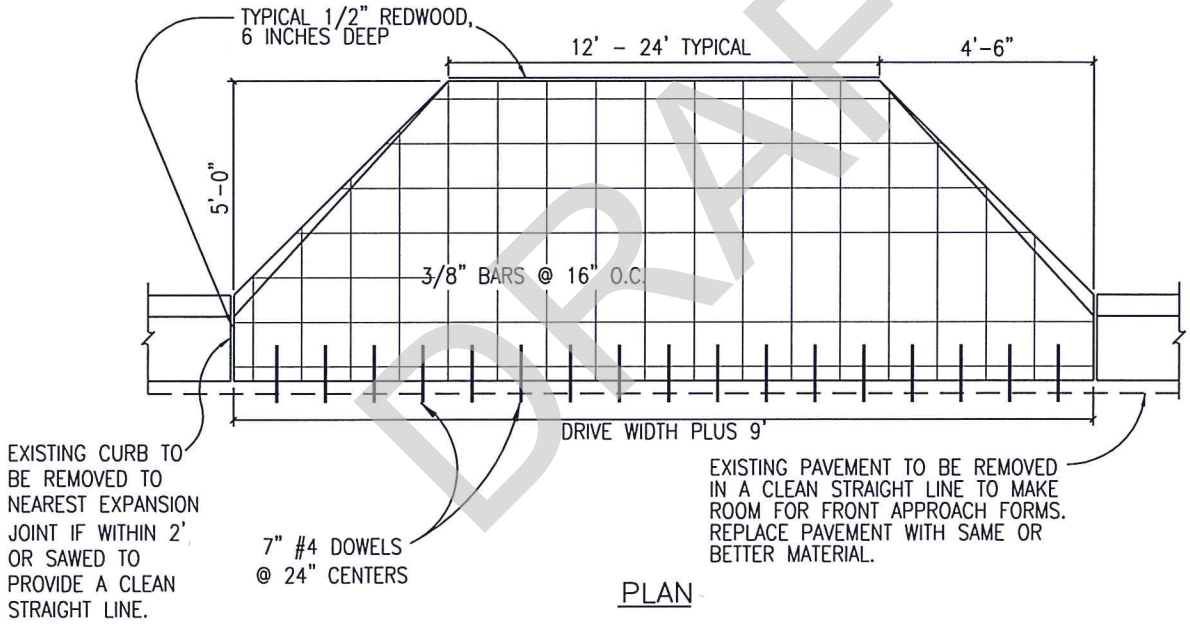

PLAN

DRAFT

CITY OF BELTON, TEXAS
DEPARTMENT OF PUBLIC WORKS

DRIVEWAY REINFORCEMENT (WINGS)
SINGLE AND TWO FAMILY RESIDENTIAL

CONSTRUCTION STANDARDS AND DETAILS

T-16
SCALE: N.T.S.
ISSUE DATE: XXX

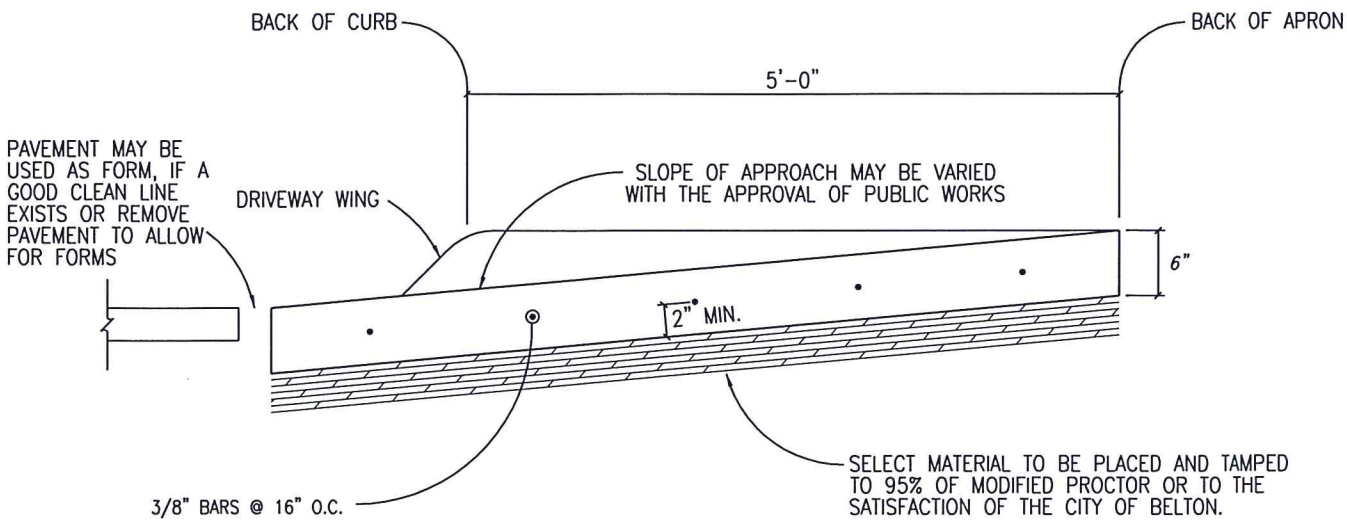

SECTION

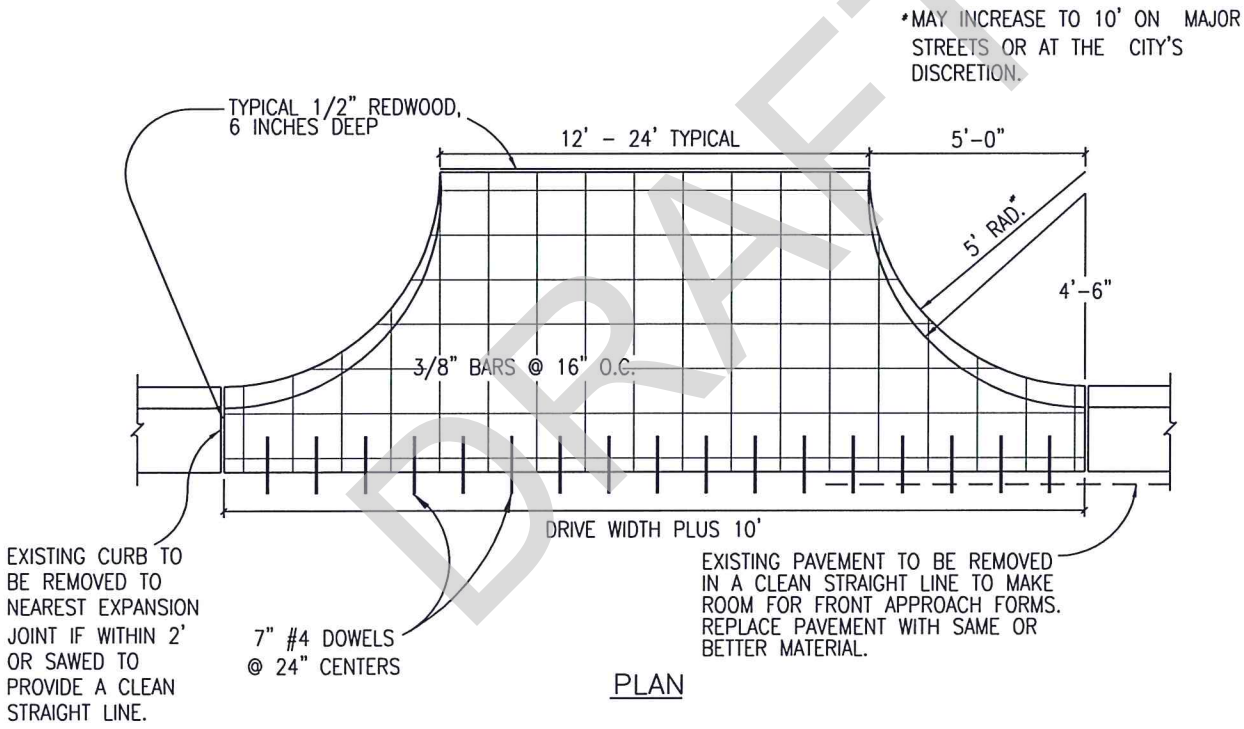

PLAN

DRAFT

CITY OF BELTON, TEXAS

DEPARTMENT OF PUBLIC WORKS

DRIVEWAY REINFORCEMENT WITH RADIUS SINGLE AND TWO FAMILY RESIDENTIAL

CONSTRUCTION STANDARDS AND DETAILS

T-17

SCALE: N.T.S.

ISSUE DATE: XXX

NOTE:
DRIVEWAY TO CONFORM TO DITCH CROSS-SECTION IF DEPTH IS NOT PROHIBITIVE.

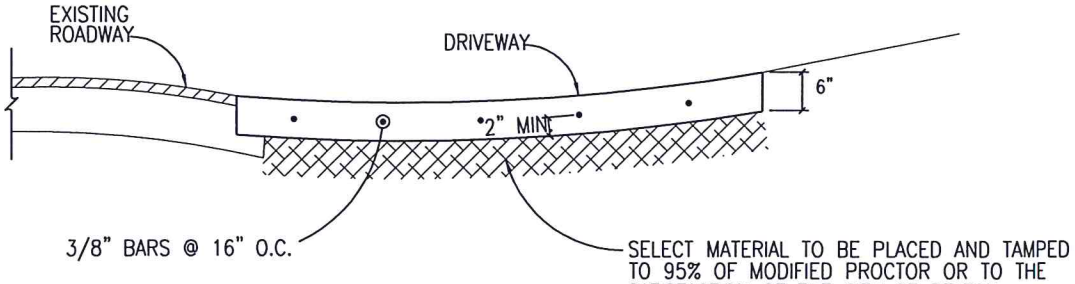

SECTION

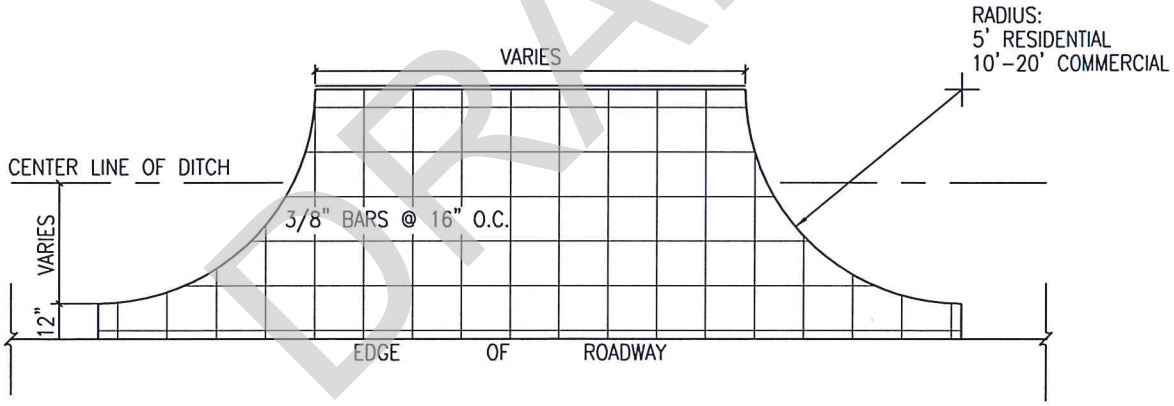

PLAN

DRAFT

CITY OF BELTON, TEXAS
DEPARTMENT OF PUBLIC WORKS

DRIVEWAY REINFORCEMENT
NO CURB & GUTTER WITH SHALLOW DITCH CROSSING

CONSTRUCTION STANDARDS AND DETAILS

T-18
SCALE: N.T.S.
ISSUE DATE: XXX

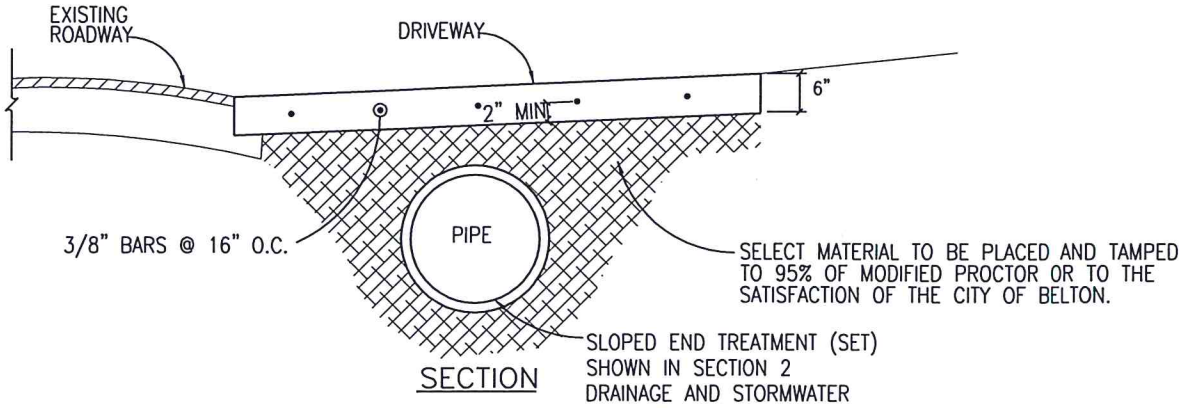

SECTION

NOTE:

INSTALL REINFORCED CONCRETE PIPE UNDER DRIVEWAY, EXTENDING PIPE 6' BEYOND EDGE OF DRIVEWAY ON BOTH SIDES. PIPE DIAMETER SHALL BE A MINIMUM OF 15" TXDOT SPECIFICATION, 6:1 SLOPED ENDS WITH CONCRETE RIP-RAP. PIPE DIAMETER SHALL BE DETERMINED BY DITCH GEOMETRY AND BY THE DIRECTOR OF PUBLIC WORKS.

DRAFT

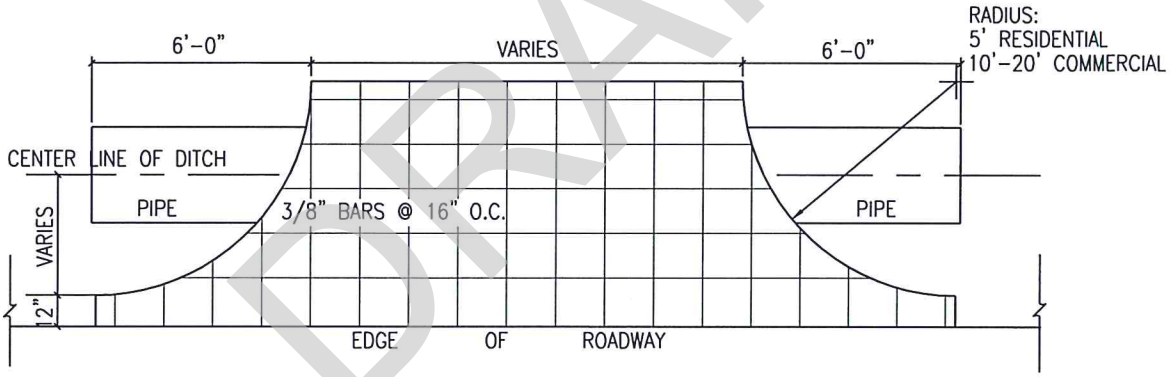

PLAN

CITY OF BELTON, TEXAS

DEPARTMENT OF PUBLIC WORKS

DRIVEWAY REINFORCEMENT
NO CURB & GUTTER WITH DEEP DITCH CROSSING

CONSTRUCTION STANDARDS AND DETAILS

T-19
SCALE: N.T.S.
ISSUE DATE: XXX

NOTE:
DRIVEWAY TO CONFORM TO DITCH CROSS-SECTION IF DEPTH IS NOT PROHIBITIVE.

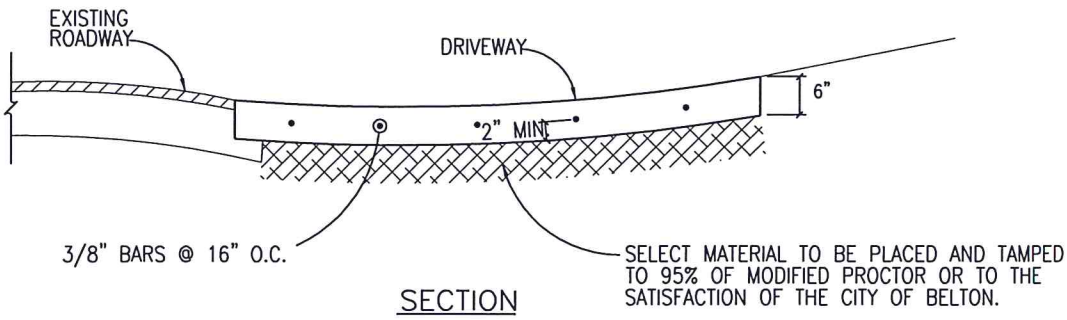

SECTION

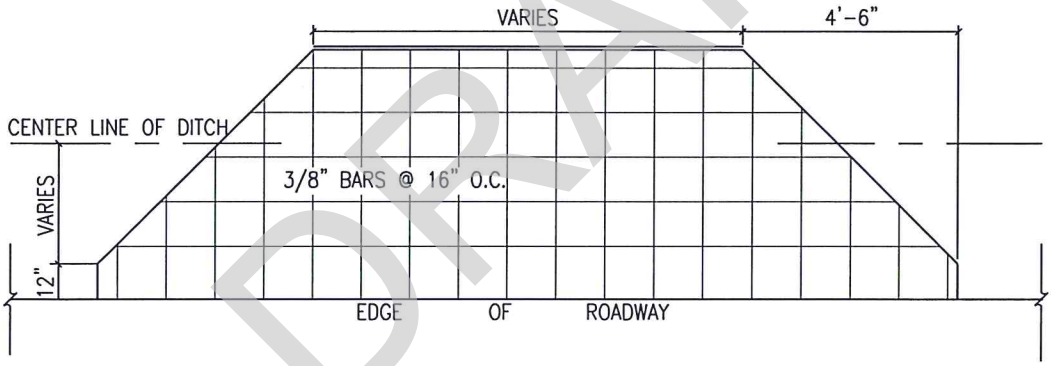

PLAN

DRAFT

CITY OF BELTON, TEXAS
DEPARTMENT OF PUBLIC WORKS

DRIVEWAY REINFORCEMENT (WINGS)
NO CURB & GUTTER WITH SHALLOW DITCH CROSSING

CONSTRUCTION STANDARDS AND DETAILS

T-20
SCALE: N.T.S.
ISSUE DATE: XXX

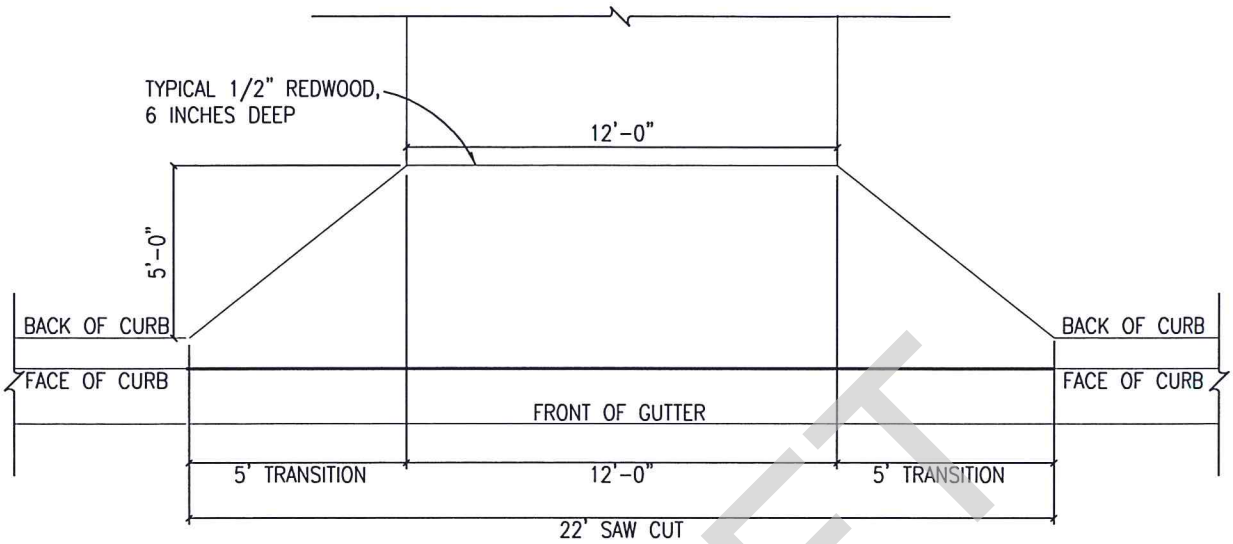

PLAN

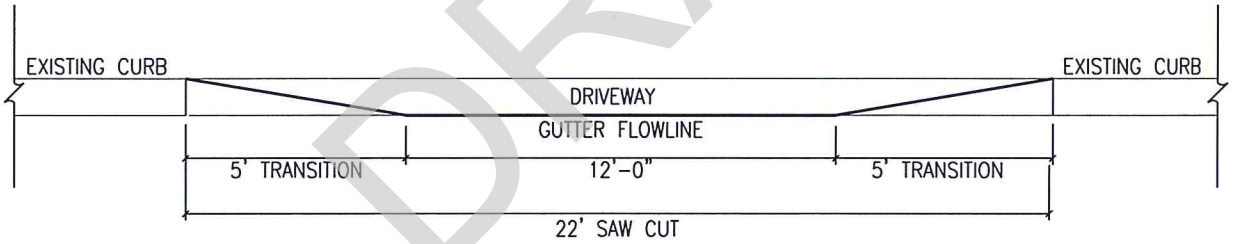

GUTTER LINE VIEW

NOTE:
USE ONLY WITH APPROVAL OF PUBLIC WORKS.

DRAFT

CITY OF BELTON, TEXAS
DEPARTMENT OF PUBLIC WORKS

ALTERNATE
DRIVEWAY CONSTRUCTION

CONSTRUCTION STANDARDS AND DETAILS

T-21
SCALE: N.T.S.
ISSUE DATE: XXX

SAFETY PROVISIONS:

THE CONTRACTOR SHALL COMPLY WITH "TEXAS MANUAL, UNIFORM TRAFFIC CONTROL DEVICES FOR STREETS AND HIGHWAYS," VOLUME WITH CURRENT REVISIONS.

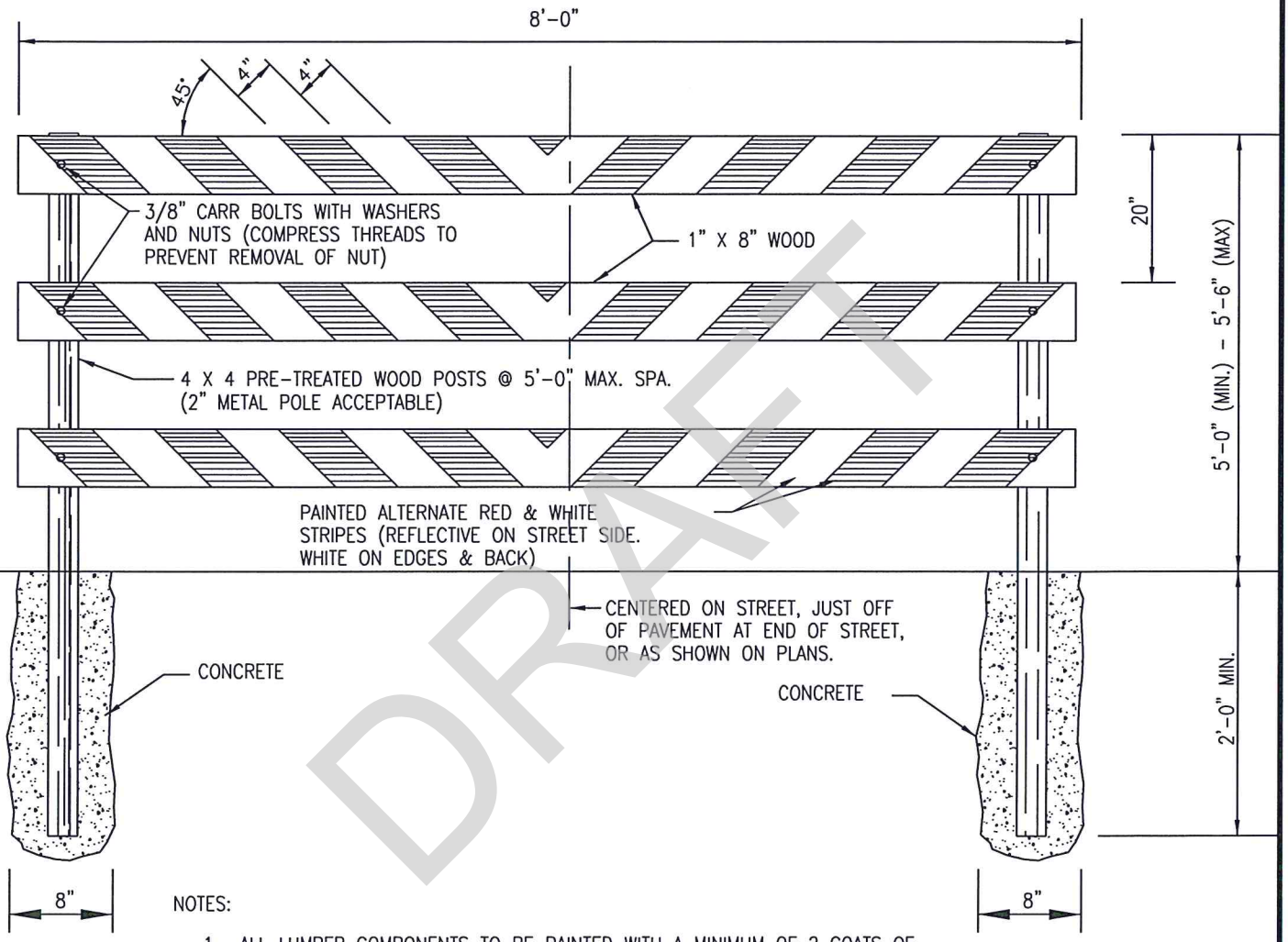

DRAFT

NOTES:

1. ALL LUMBER COMPONENTS TO BE PAINTED WITH A MINIMUM OF 2 COATS OF WHITE PAINT.
2. RAILS SHALL BE REFLECTIVE RED AND REFLECTIVE WHITE STRIPED ON ONE SIDE.
3. STRIPING SHALL COVER FULL WIDTH OF RAILS.
4. PERTAINING TO THIS DETAIL, SHORT TERM IS DEFINED AS A PERIOD OF TIME NO LONGER THAN 6 MONTHS.

CITY OF BELTON, TEXAS

DEPARTMENT OF PUBLIC WORKS

STANDARD

TYPE III BARRICADE – SHORT TERM

CONSTRUCTION STANDARDS AND DETAILS

T-22

SCALE: N.T.S.

ISSUE DATE: XXX

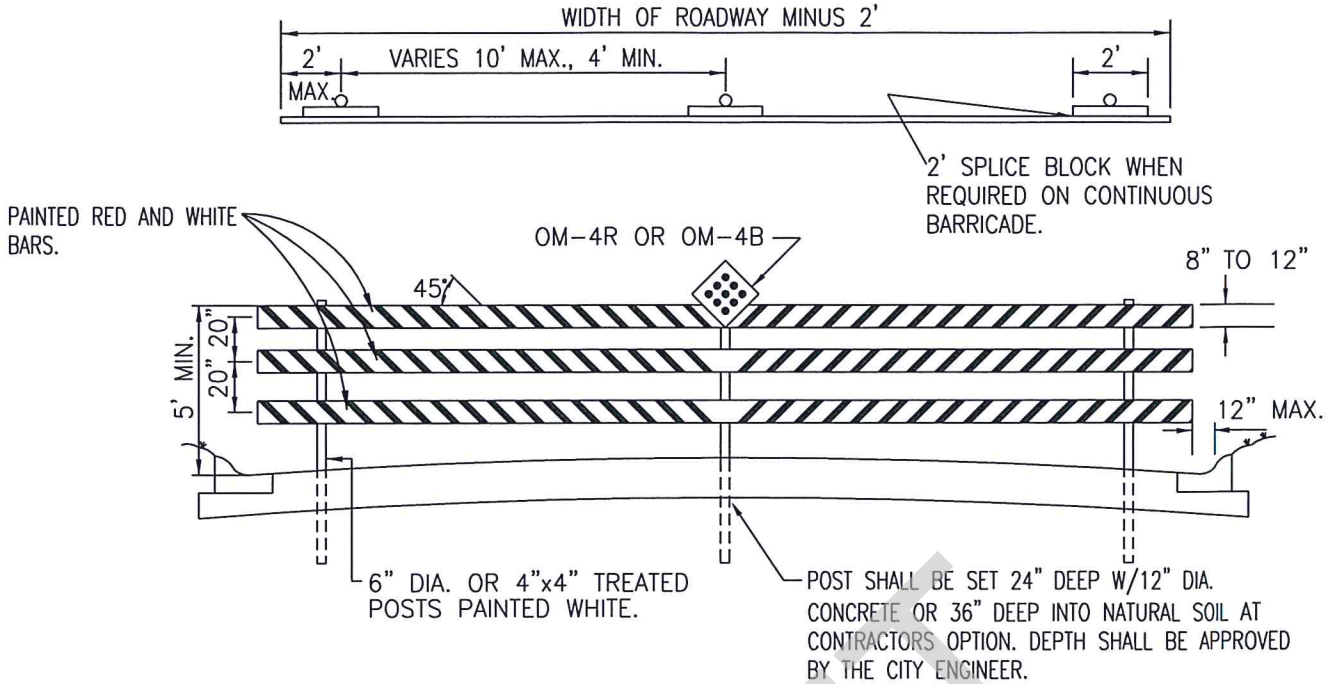

GENERAL NOTES FOR THIN WALL TUBE TYPE SIGN SUPPORT:

1. THE BASE SOCKET IS FORMED FROM 2 7/8 " O.D. X 12 GAUGE GALVANIZED PIPE.
2. THE WEDGE IS FORMED FROM 11 GAUGE STEEL GALVANIZED PER ASTM A525.
3. THE SIGN POST IS 2.375" O.D. X 0.095" THIN WALL STEEL TUBING.
4. STEEL SUPPORTS SHALL BE MADE FROM NEW MATERIAL AND SHALL BE CORROSION RESISTANT. STEEL SUPPORTS SHALL BE GALVANIZED IN ACCORDANCE WITH ASTM DESIGNATIONS A123 OR A525 (G-90 OR BETTER).
5. SUPPORTS SHALL BE STRAIGHT WITHIN 1/4 " PER 5 FEET OF LENGTH AND SHALL HAVE A SMOOTH, UNIFORM FINISH FREE FROM DEFECTS AFFECTING STRENGTH OR APPEARANCE. ANY BOLT HOLES AND SHEARED ENDS SHALL BE FREE FROM BURRS. BASES OF MULTISECTION SUPPORTS SHALL NOT EXTEND MORE THAN 5 INCHES ABOVE GROUND WHEN INSTALLED.
6. BOLTS, NUTS, SCREWS, WASHERS AND OTHER MISCELLANEOUS HARDWARE SHALL BE GALVANIZED IN ACCORDANCE TO ASTM DESIGNATION: A153 CLASS C OR D, OR B695 CLASS 50.
7. BARRICADE SUPPORTS SYSTEMS USED ON THIS SHEET MAY BE SUITABLE FOR ONLY CERTAIN SOIL TYPES. THE CONTRACTOR IS RESPONSIBLE FOR SELECTING THE APPROPRIATE SUPPORT SYSTEM FOR SOIL CONDITIONS ON EACH PROJECT WITH APPROVAL BY CITY ENGINEER.

TYPE III BARRICADES:

1. REFER TO THE COMPLIANT WORK ZONE TRAFFIC CONTROL DEVICES LIST (CWZTCD) FOR DETAILS OF THE TYPE III BARRICADES AND A LIST OF ALL MATERIALS USED IN THE CONSTRUCTION OF TYPE III BARRICADES.
2. TYPE III BARRICADES SHALL BE USED AT EACH END OF CONSTRUCTION PROJECTS CLOSED TO ALL TRAFFIC.
3. BARRICADES EXTENDING ACROSS A ROADWAY SHOULD HAVE STRIPES THAT SLOPE DOWNWARD IN THE DIRECTION TOWARD WHICH TRAFFIC MUST TURN IN DETOURING. WHEN BOTH RIGHT AND LEFT TURNS PROVIDED, THE CHEVRON STRIPING MAY SLOPE DOWNWARD IN BOTH DIRECTIONS FROM THE CENTER OF THE BARRICADE.
4. STRIPING OF RAILS, FOR THE RIGHT SIDE OF THE ROADWAY, SHOULD SLOPE DOWNWARD TO THE LEFT. FOR THE LEFT SIDE OF THE ROADWAY, STRIPING SHOULD SLOPE DOWNWARD TO THE RIGHT.
5. IDENTIFICATION MARKINGS MAY BE SHOWN ONLY ON THE BACK OF THE BARRICADE RAILS. THE MAXIMUM HEIGHT OF LETTERS AND/OR COMPANY LOGOS USED FOR IDENTIFICATION SHALL BE 1".
6. BARRICADES SHALL NOT BE PLACED PARALLEL TO TRAFFIC UNLESS AN ADEQUATE CLEAR ZONE IS PROVIDED.
7. WARNING LIGHTS SHALL NOT BE INSTALLED ON BARRICADES.
8. PERTAINING TO THIS DETAIL, LONG TERM IS DEFINED AS A PERIOD OF TIME LONGER THAN 6 MONTHS.

DRAFT

CITY OF BELTON, TEXAS
DEPARTMENT OF PUBLIC WORKS

STANDARD

TYPE III BARRICADE – LONG TERM

CONSTRUCTION STANDARDS AND DETAILS

T-23
SCALE: N.T.S.
ISSUE DATE: XXX

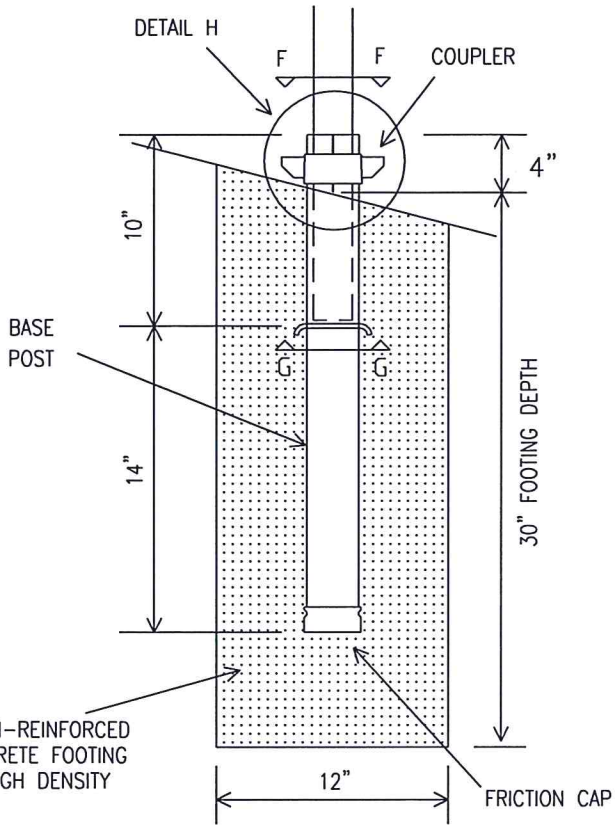

PROFILE

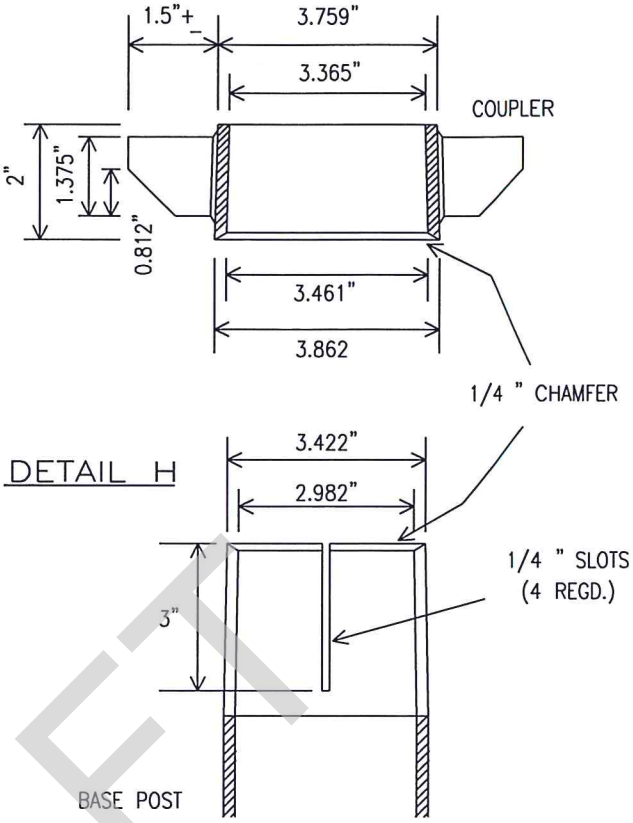

DETAIL H

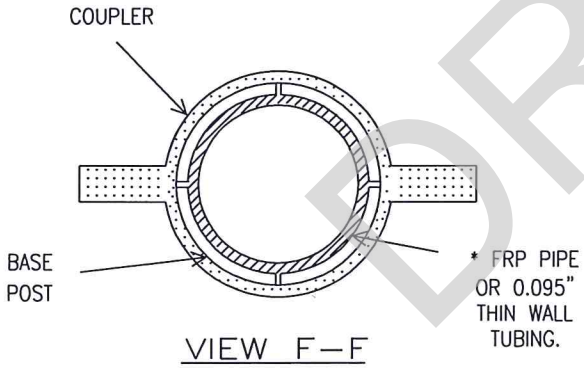

VIEW F–F

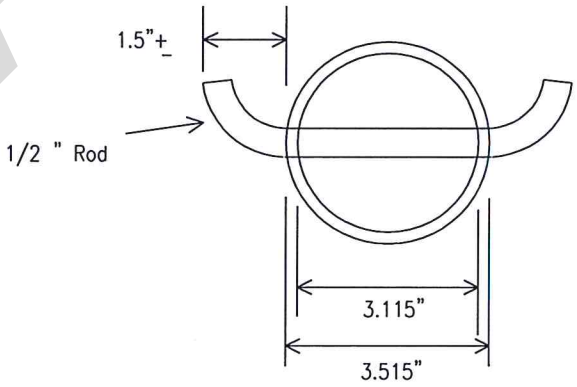

VIEW G–G

* PLASTING INSERT MUST BE USED WITH 1/16 " THIN WALL TUBING.

** FOOTING SHALL BE REMOVED AND BACKFILLED WHEN BARRICADE IS REMOVED.

DRAFT

CITY OF BELTON, TEXAS
DEPARTMENT OF PUBLIC WORKS

UNIVERSAL ANCHOR SYSTEM (TYPE III BARRICADE)

CONSTRUCTION STANDARDS AND DETAILS

T-24
SCALE: N.T.S.
ISSUE DATE: XXX

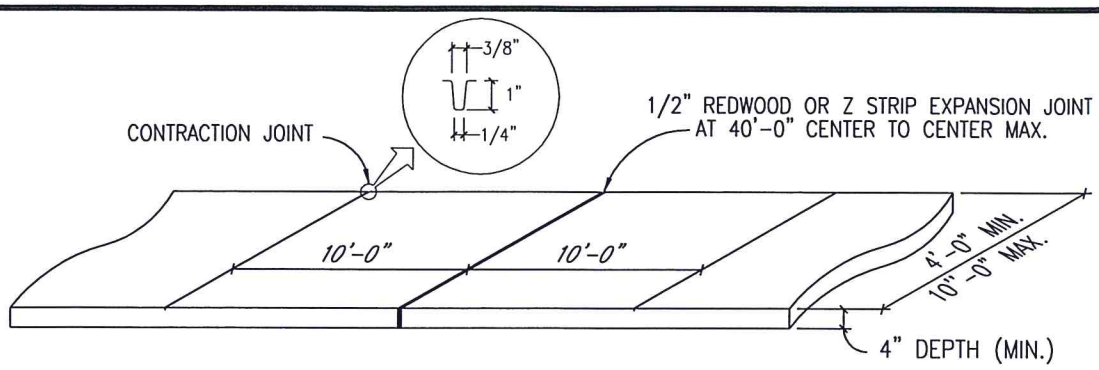

TYPE I – FOR USE WHEN SIDEWALK IS PLACED 3' OR MORE FROM THE BACK OF CURB, OR ON LOCAL STREET SECTIONS.

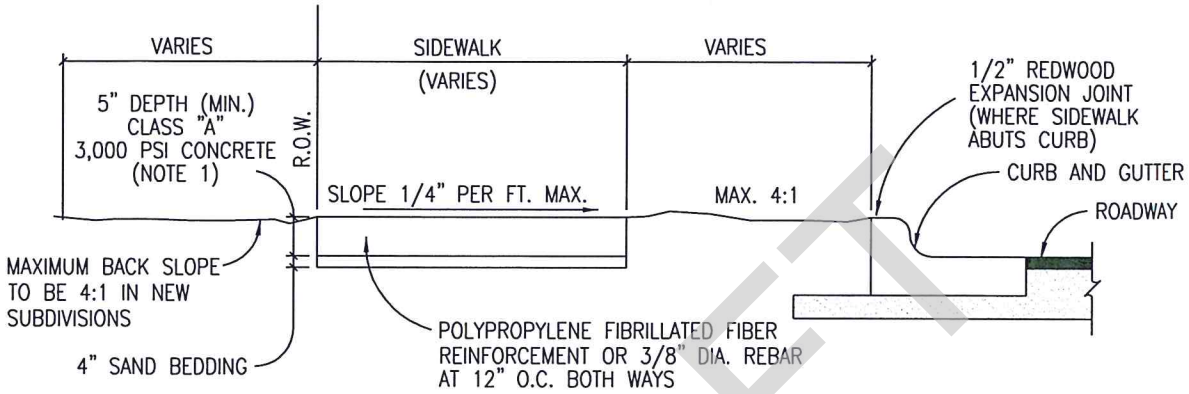

DRAFT

NOTES:

1. FOR ROLLER STAMPED SIDEWALK: MATCH TO DESIGN ENGINEER SPECIFICATIONS.
2. SIDEWALK SHALL CONFORM TO CURRENT AMERICANS WITH DISABILITIES ACT STANDARDS.
3. FOR PROJECTS IN WHICH PEDESTRIAN COMPONENTS (SIDEWALKS, HANDICAP RAMPS, ETC.) TOTAL CONSTRUCTION COST $50,000 OR MORE, CONSTRUCTION PLANS SHALL BE SUBMITTED AND APPROVED BY THE TEXAS DEPARTMENT OF LICENSING AND REGULATION BY THE ENGINEER OR DESIGN PROFESSIONAL OF RECORD, AND INSPECTED AFTER CONSTRUCTION BY TDLR.
4. ANY VARIANCE IN TEXTURE, GRADE OR ALIGNMENT MUST BE APPROVED BY THE TEXAS DEPARTMENT OF LICENSING AND REGULATION.
5. ALL CONCRETE SURFACES SHALL RECEIVE A LIGHT BROOM FINISH UNLESS NOTED OTHERWISE IN THE PLANS.
6. ALL CONCRETE SURFACES SHALL RECEIVE AN APPLICATION OF WHITE PIGMENTED CURING COMPOUND IN ACCORDANCE WITH TxDOT SPECIFICATION ITEM 420, PARAGRAPH J3.
7. METAL SUPPORT CHAIRS SHALL BE AS MANUFACTURED BY DAYTON SUPERIOR, CHCP OR CHCV.
8. ALL SUBRADE SHALL BE UNDISTURBED. THAT WHICH IS DISTURBED, SHALL BE COMPACTED AT 95% STANDARD PROCTOR.
9. PROPOSED SIDEWALKS SHALL COMPLY WITH CITY OF BELTON CODES AND ORDINANCES, AND SECTION 1.02 IN THE DESIGN MANUAL. WHEN EXISTING GRADE IS LOWER THAN NEW BACK OF SIDEWALK, FILL SHALL BE PLACED WITH A MAX SLOPE OF 25% DOWN TO EXISTING GRADE. FILL SHALL BE COMPACTED TO 95% STANDARD PROCTOR AT OR ABOVE OPTIMUM MOISTURE CONTENT.
   ON HIKE AND BIKE TRAILS– CLEARANCE: SIGNAGE, ELECTRICAL POLES, GUY WIRES, STREET LIGHTS, OR ANY OTHER OBSTRUCTIONS ARE ALLOWED IN SIDEWALKS OR TRAILS OR WITHIN 24" OF OUTSIDE EDGE OF THE SIDEWALK.

CITY OF BELTON, TEXAS
DEPARTMENT OF PUBLIC WORKS

SIDEWALK SECTION STANDARD

CONSTRUCTION STANDARDS AND DETAILS

T-25
SCALE: N.T.S.
ISSUE DATE: XXX

NOTES:

1. SIDEWALK WIDTH SHALL BE PER SHEETS T-01 TO T-05 AND MOST CURRENT CITY OF BELTON SUBDIVISION ORDINANCE.

2. ALL SLOPES ARE MAXIMUM ALLOWABLE. FLATTER SLOPES THAT WILL STILL DRAIN PROPERLY ARE ENCOURAGED.

3. ALL CONCRETE SURFACES SHALL RECEIVE A LIGHT BROOM FINISH UNLESS NOTED OTHERWISE IN THE PLANS.

4. FOR PURPOSES OF WARNING, THE CURB RAMPS SHALL HAVE A LIGHT REFLECTIVE VALUE AND TEXTURE THAT SIGNIFICANTLY CONTRASTS WITH THAT OF ADJOINING PEDESTRIAN ROUTES.

5. TEXTURES MAY CONSIST OF PAVERS WITH TRUNCATED DOMED SURFACES. TEXTURES ARE REQUIRED TO BE DETECTABLE UNDERFOOT. SURFACES THAT WOULD ALLOW WATER TO ACCUMULATE ARE PROHIBITED. TEXTURES SHALL BE AT LEAST 2-FEET IN LENGTH IN THE DIRECTION OF THE RAMP AND COVER THE WIDTH OF THE RAMP. SEE DETAIL SHEET T-35.

6. COLOR CONTRAST SHALL BE ACCOMPLISHED WITH RED PAVERS THAT HAVE TRUNCATED DOMES WHICH WOULD PROVIDE A CONTRAST WITH TYPICALLY LIGHT COLORED CONCRETE. STAINED CONCRETE IS NOT ALLOWED. SEE DETAIL SHEET T-35.

7. ADDITIONAL INFORMATION ON CURB RAMP LOCATION, DESIGN, VISIBILITY AND TEXTURE MAY BE FOUND IN THE CURRENT EDITION OF THE TEXAS ACCESSIBILITY STANDARDS (TAS) PREPARED AND ADMINISTERED BY THE TEXAS DEPARTMENT OF LICENSING AND REGULATION (TDLR).

8. RAISED MEDIANS SEPARATE OPPOSING DIRECTIONS OF TRAFFIC AND PROVIDE A REFUGE AREA FOR PEDESTRIANS IF THEY ARE UNABLE TO CROSS THE ENTIRE ROADWAY IN THE ALLOTTED SIGNAL PHASE. TO SERVE AS A REFUGE AREA, THE MEDIAN SHOULD BE A MINIMUM OF 6 FEET WIDE. MEDIANS SHOULD BE DESIGNED TO PROVIDE ACCESSIBLE PASSAGE OVER OR THROUGH THEM.

9. FOR PROJECTS IN WHICH PEDESTRIAN COMPONENTS (SIDEWALKS, HANDICAP RAMPS, ETC.) TOTAL CONSTRUCTION COST $50,000 OR MORE, CONSTRUCTION PLANS SHALL BE SUBMITTED AND APPROVED BY THE TEXAS DEPARTMENT OF LICENSING AND REGULATION BY THE DESIGN PROFESSIONAL OF RECORD, AND INSPECTED AFTER CONSTRUCTION BY TDLR.

10. ANY PART OF THE ACCESSIBLE ROUTE WITH A SLOPE GREATER THAN 1:20 (5%) SHALL BE CONSIDERED A RAMP. IF A RAMP HAS A RISE GREATER THAN 6 INCHES OR A HORIZONTAL PROJECTION GREATER THAN 72 INCHES, THEN IT SHALL HAVE HANDRAILS ON BOTH SIDES. THE ONLY EXCEPTION IS AT CURB RAMPS. HANDRAILS ARE NOT REQUIRED ON CURB RAMPS. CURB RAMPS SHALL BE PROVIDED WHEREVER AN ACCESSIBLE ROUTE CROSSES (PENETRATES) A CURB. CURB RAMPS ARE GENERALLY INTERPRETED AS ONLY THE PORTION TYING DIRECTLY INTO THE ROADWAY.

11. ALL SIDEWALKS SHALL BE DOWELED INTO EXISTING SIDEWALKS, DRIVEWALKS, DRIVEWAYS, INLET BOXES, RETAINING WALLS, ETC.

DRAFT

CITY OF BELTON, TEXAS
DEPARTMENT OF PUBLIC WORKS

PEDESTRIAN RAMPS
GENERAL NOTES

CONSTRUCTION STANDARDS AND DETAILS

T-26
SCALE: N.T.S.
ISSUE DATE: XXX

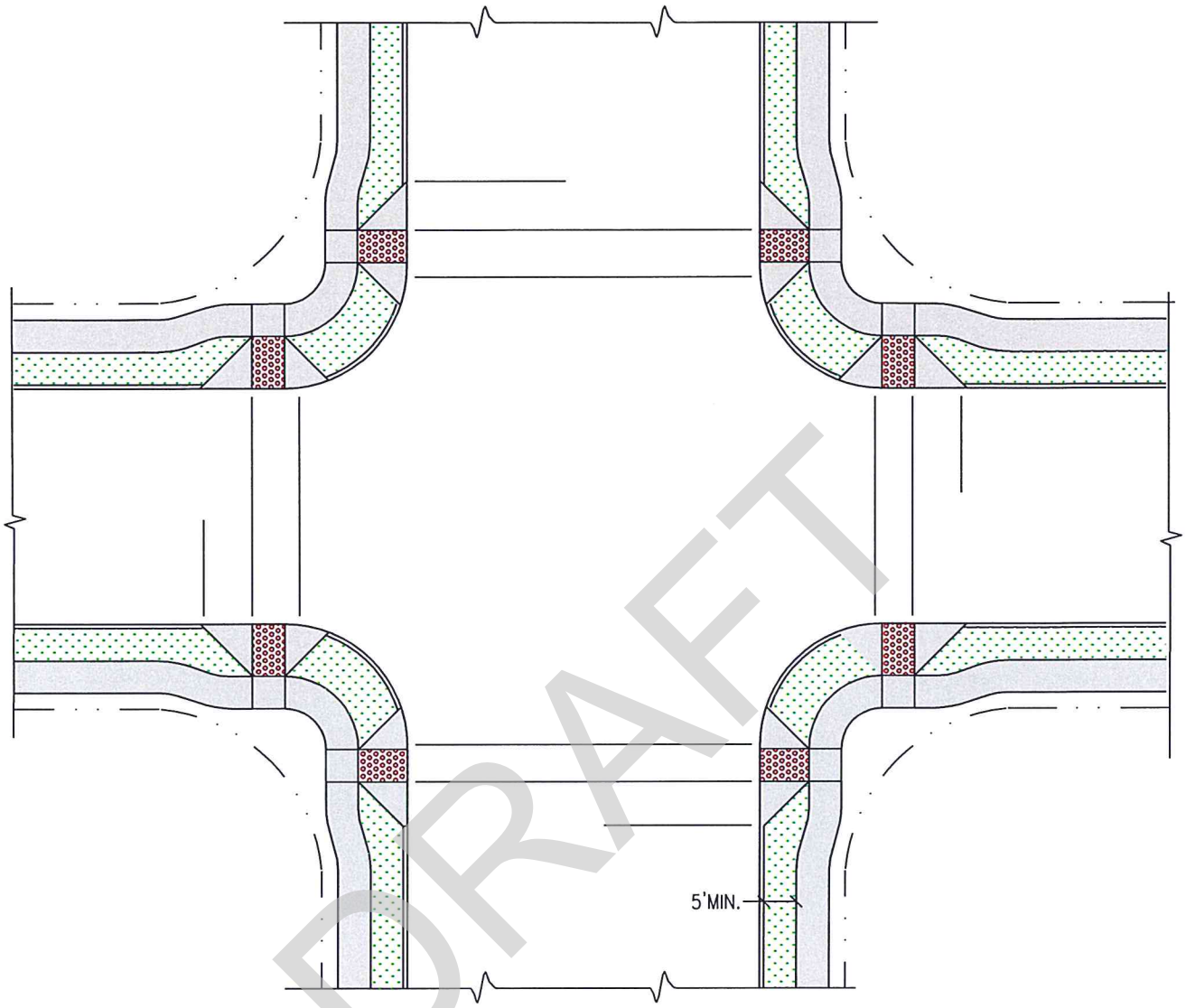

DRAFT

OFFSET SIDEWALKS

NOTE: CURB RAMPS WITH RETURNED CURBS INSTEAD OF SIDE FLARES ARE PERMITTED WHERE PEDESTRIANS WOULD NOT NORMALLY WALK ACROSS THE RAMP

CITY OF BELTON, TEXAS
DEPARTMENT OF PUBLIC WORKS

TYPICAL
INTERSECTION LAYOUT

CONSTRUCTION STANDARDS AND DETAILS

T-27
SCALE: N.T.S.
ISSUE DATE: XXX

SINGLE DIAGONAL CURB RAMP

FOR ON-SYSTEM NEW CONSTRUCTION, RECONSTRUCTION AND REHABILITATION PROJECTS WHERE PEDESTRIAN FACILITIES ARE NEWLY CONSTRUCTED OR SUBSTANTIALLY ALTERED, CONSTRUCTION OF SINGLE DIAGONAL RAMPS IS NOT PERMITTED.

FOR ON-SYSTEM PROJECTS SUCH AS RESTORATION, SEAL COAT AND OVERLAY PROJECTS, PLACEMENT OF CURB RAMPS SHOULD BE EVALUATED IN THE FOLLOWING ORDER OF PREFERENCE: PERPENDICULAR, PARALLEL OR COMBINATION, AND SINGLE DIAGONAL. THE MOST PREFERABLE OPTION THAT IS FEASIBLE AT EACH CORNER SHALL BE PROVIDED.

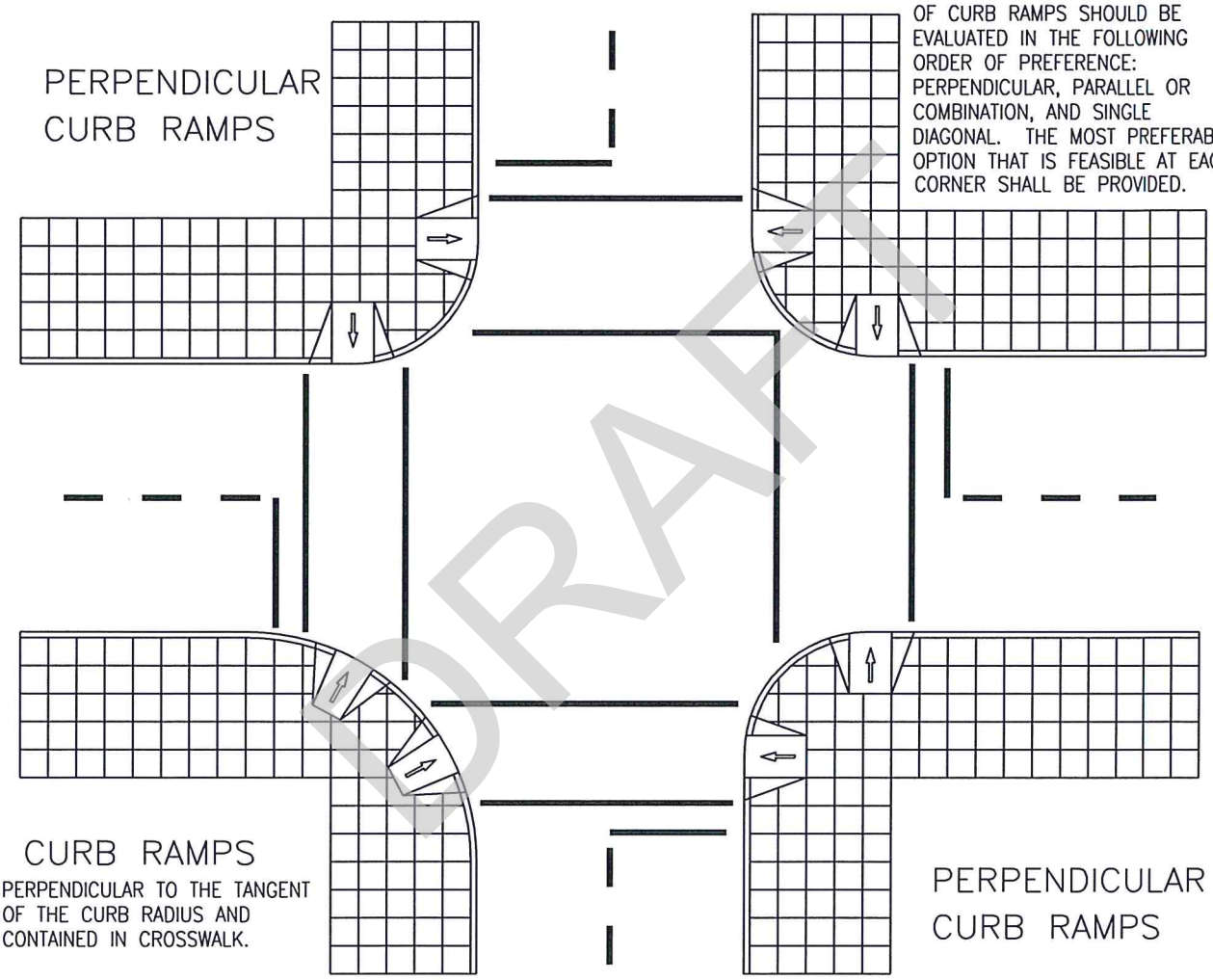

DRAFT

CITY OF BELTON, TEXAS
DEPARTMENT OF PUBLIC WORKS

CURB RAMPS
PLACEMENTS AT INTERSECTIONS

CONSTRUCTION STANDARDS AND DETAILS

T-28
SCALE: N.T.S.
ISSUE DATE: XXX

LEGEND

- DETECTABLE WARNING PAVERS SEE DETAIL T-35
- CONCRETE
- NON-WALKING SURFACE

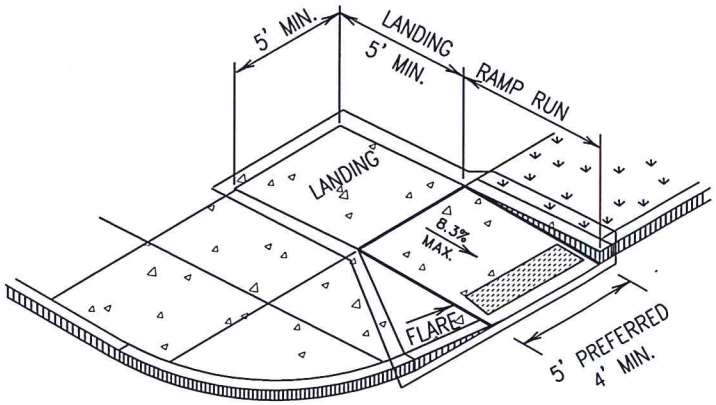

PERPENDICULAR CURB RAMP

TxDOT TYPE 1

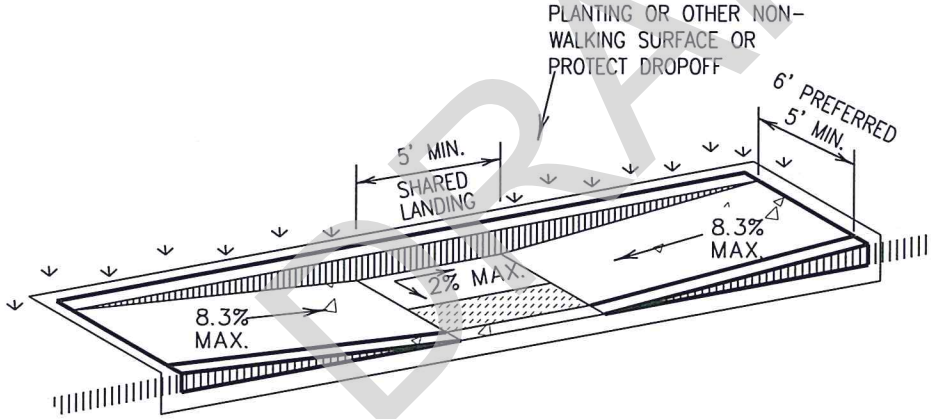

PARALLEL CURB RAMP
(USE ONLY WHERE WATER WILL NOT POND IN THE LANDING.)

TxDOT TYPE 2

DRAFT

CITY OF BELTON, TEXAS

DEPARTMENT OF PUBLIC WORKS

SIDEWALK RAMP DETAILS TYPES 1 & 2

CONSTRUCTION STANDARDS AND DETAILS

T-29
SCALE: N.T.S.
ISSUE DATE: XXX

LEGEND

DETECTABLE WARNING PAVERS SEE DETAIL T-35

CONCRETE

NON-WALKING SURFACE

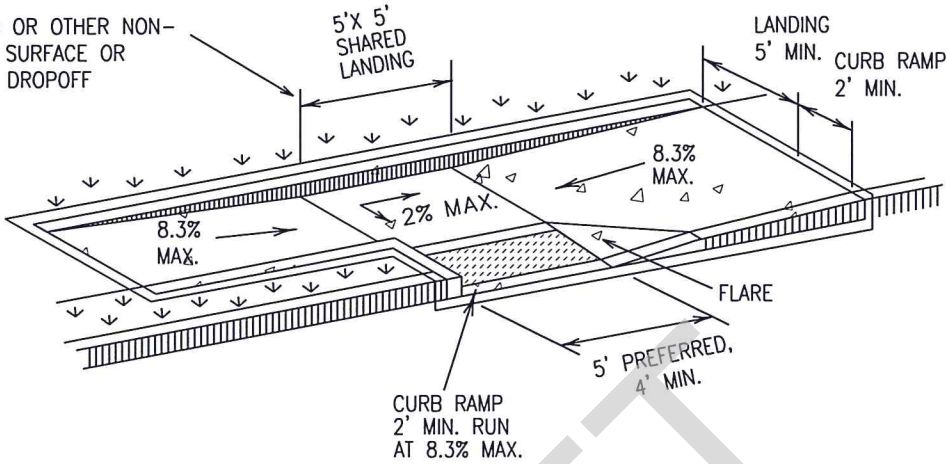

TxDOT TYPE 3

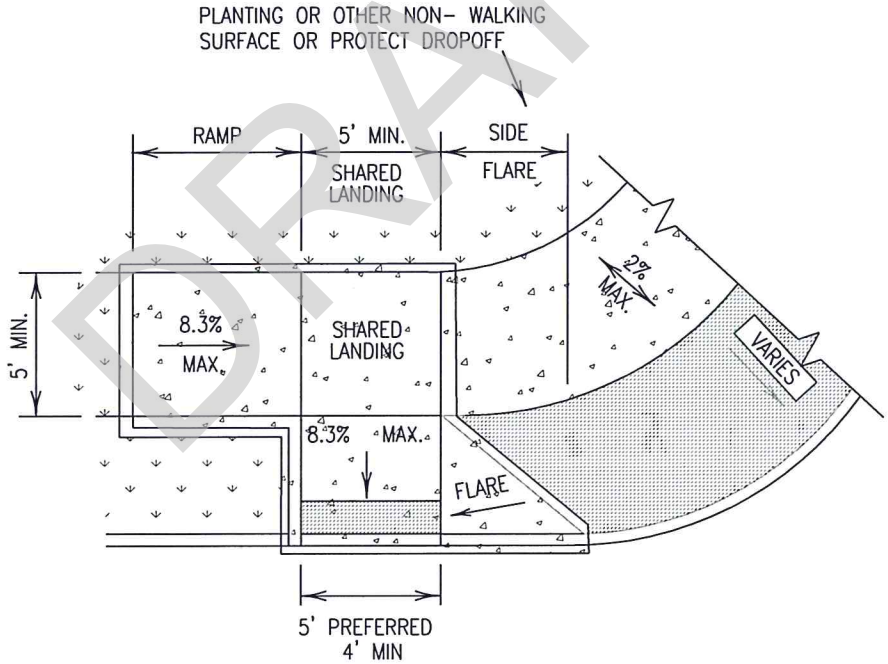

TxDOT TYPE 6

DRAFT

CITY OF BELTON, TEXAS

DEPARTMENT OF PUBLIC WORKS

SIDEWALK RAMP DETAILS TYPE 3 & 6

CONSTRUCTION STANDARDS AND DETAILS

T-30

SCALE: N.T.S.

ISSUE DATE: XXX

LEGEND

- DETECTABLE WARNING PAVERS SEE DETAIL T-35
- CONCRETE
- NON-WALKING SURFACE

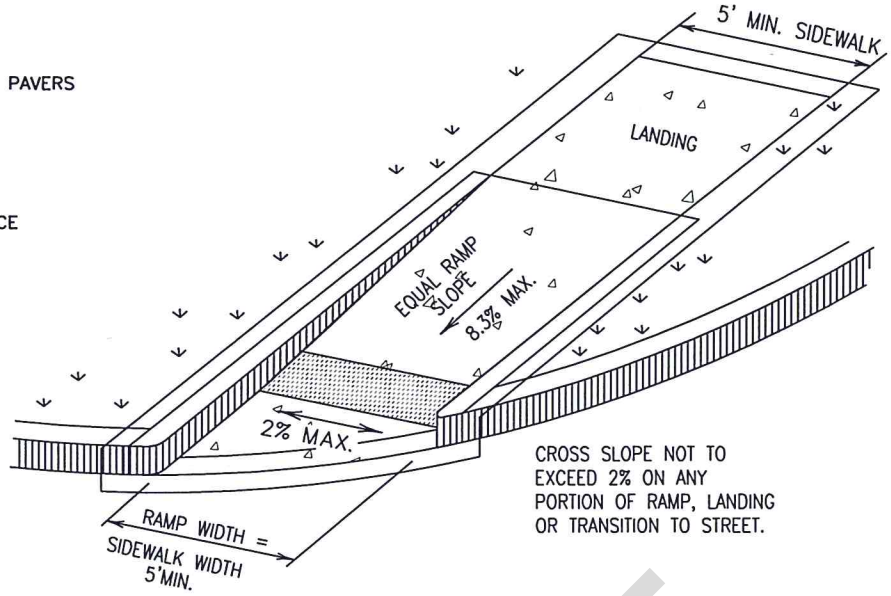

(SIDEWALK SET BACK FROM CURB)

TxDOT TYPE 7

DRAFT

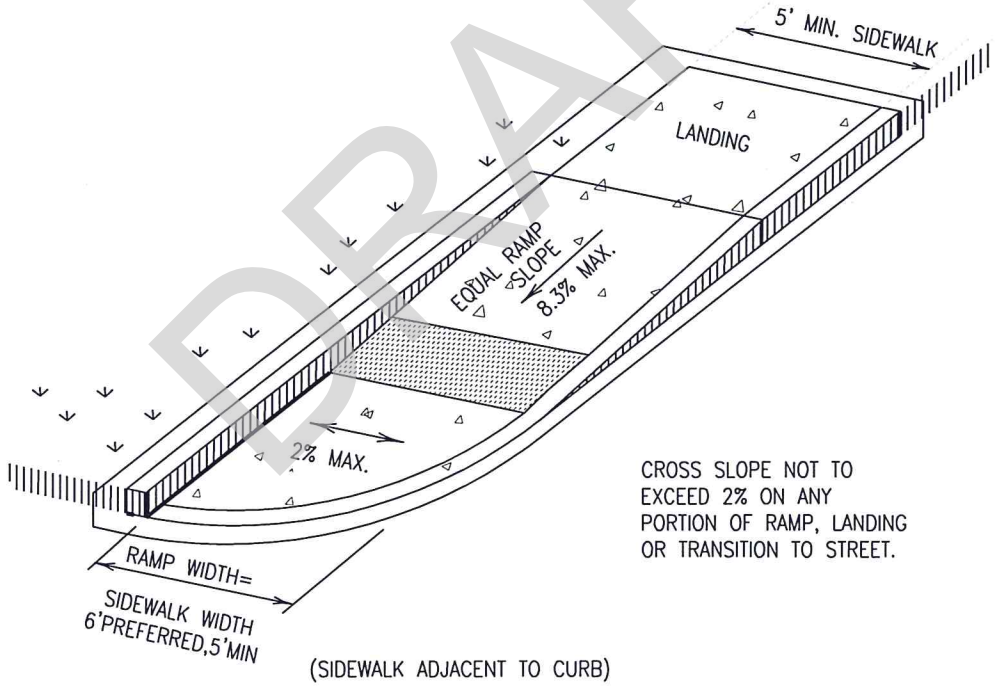

(SIDEWALK ADJACENT TO CURB)

TxDOT TYPE 10

DIRECTIONAL RAMP WITHIN RADIUS

CITY OF BELTON, TEXAS

DEPARTMENT OF PUBLIC WORKS

SIDEWALK RAMP DETAILS TYPES 7 & 10

CONSTRUCTION STANDARDS AND DETAILS

T-31

SCALE: N.T.S.

ISSUE DATE: XXX

LEGEND

- DETECTABLE WARNING PAVERS SEE DETAIL T-35
- CONCRETE
- NON-WALKING SURFACE

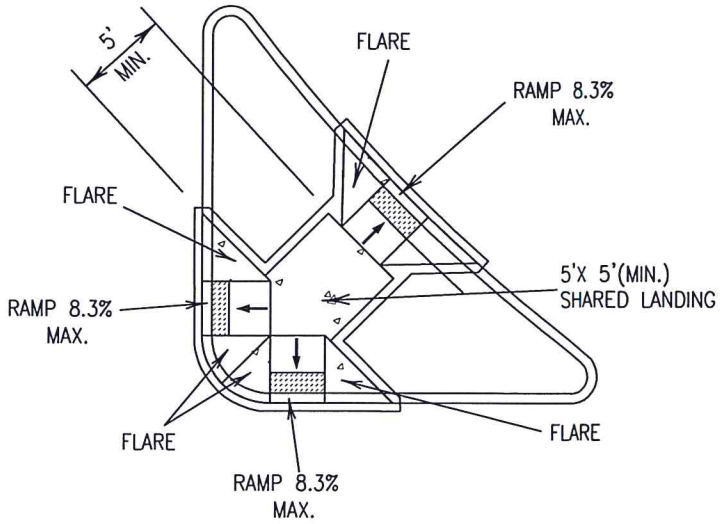

COMBINATION ISLAND RAMPS

TxDOT TYPE 22

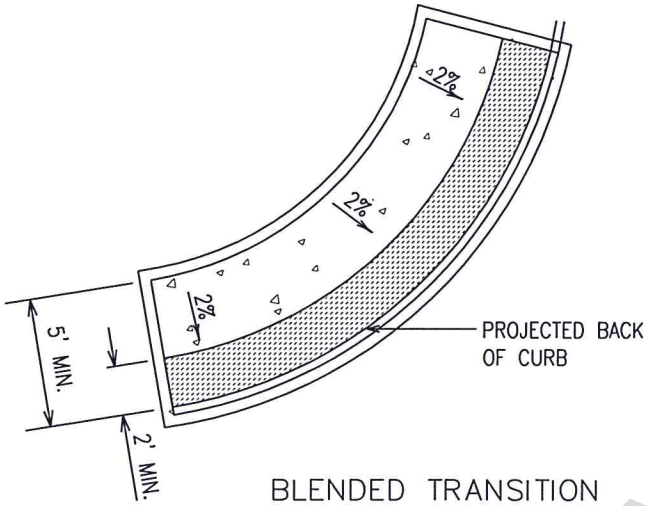

BLENDED TRANSITION

TxDOT TYPE 5

DRAFT

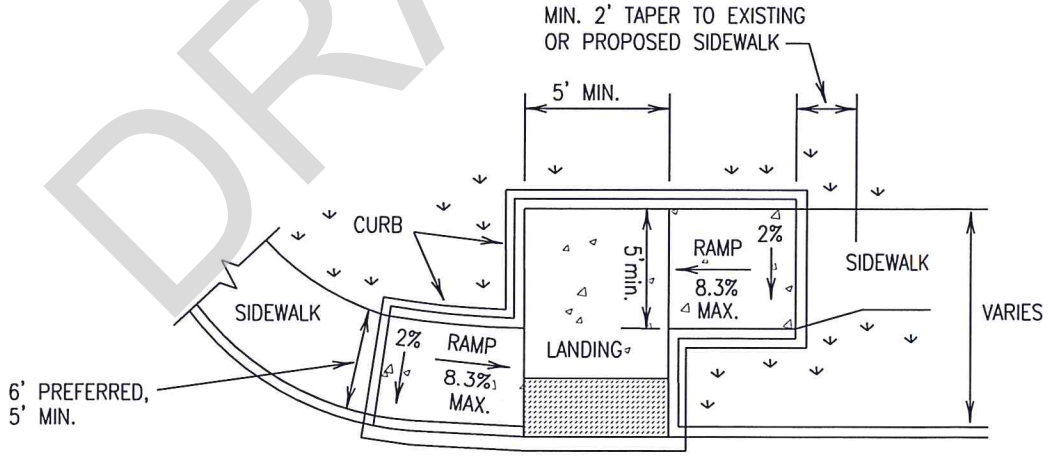

OFFSET PARALLEL CURB RAMP

TxDOT TYPE 11

CITY OF BELTON, TEXAS

DEPARTMENT OF PUBLIC WORKS

SIDEWALK RAMP DETAILS TYPES 5,11 & 22

CONSTRUCTION STANDARDS AND DETAILS

T-31B

SCALE: N.T.S.

ISSUE DATE: XXX

LEGEND

CONCRETE

NON-WALKING SURFACE

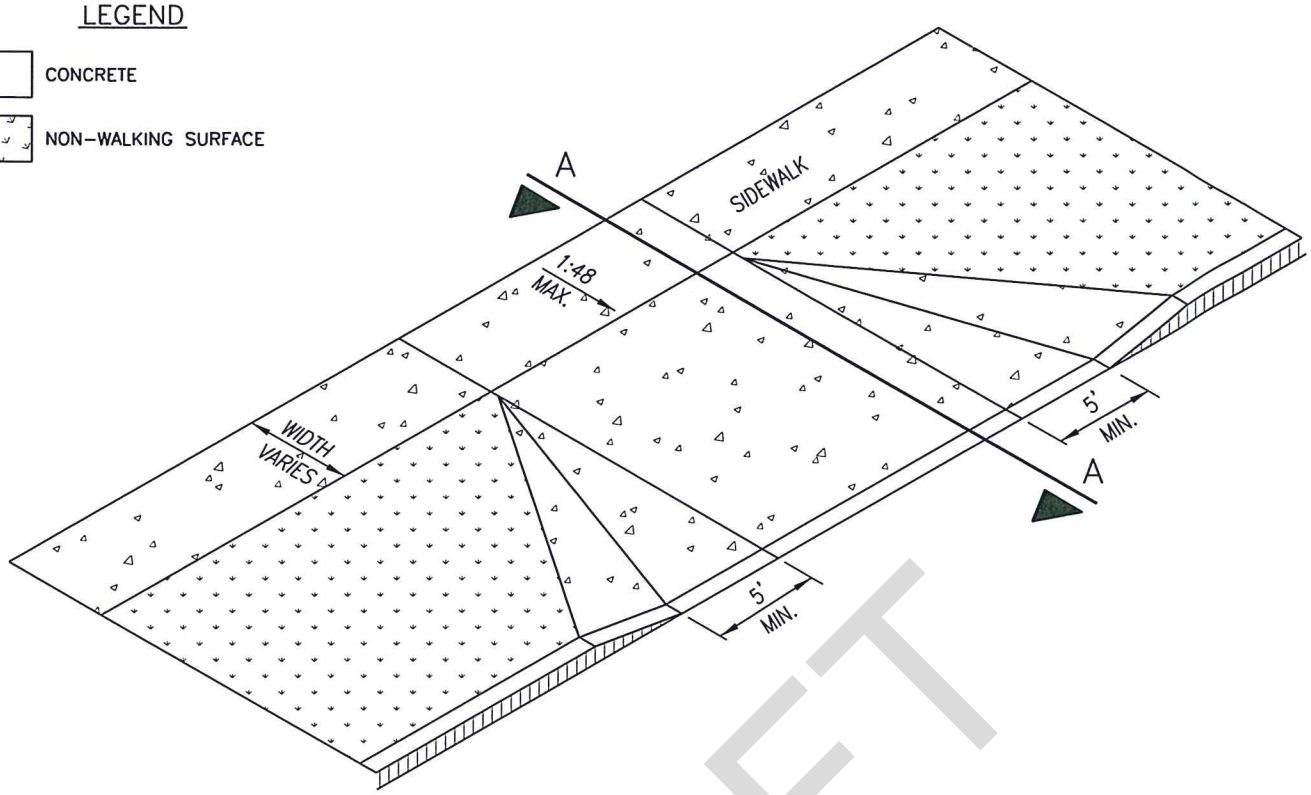

SIDEWALK AT DRIVEWAY

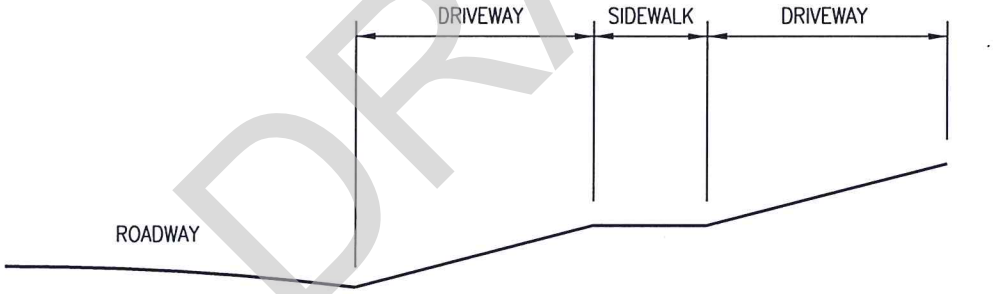

SECTION "A-A"

DRAFT

CITY OF BELTON, TEXAS

DEPARTMENT OF PUBLIC WORKS

SIDEWALK TREATMENT
AT DRIVEWAYS

CONSTRUCTION STANDARDS AND DETAILS

T-32
SCALE: N.T.S.
ISSUE DATE: XXX

LEGEND

CONCRETE

NON-WALKING SURFACE

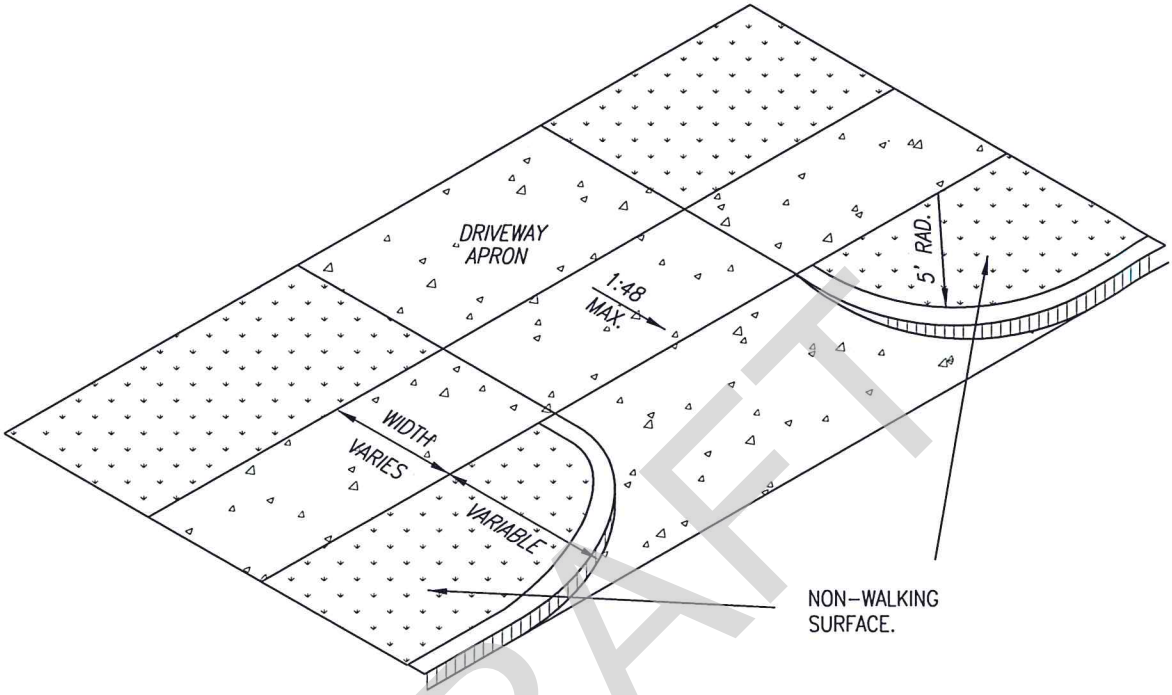

DRAFT

CITY OF BELTON, TEXAS

DEPARTMENT OF PUBLIC WORKS

TYPICAL SIDEWALK WITH
DRIVEWAY APPROACH

CONSTRUCTION STANDARDS AND DETAILS

T-33

SCALE: N.T.S.

ISSUE DATE: XX

LEGEND

DETECTABLE WARNING PAVERS
SEE DETAIL T-35

CONCRETE

NON-WALKING SURFACE

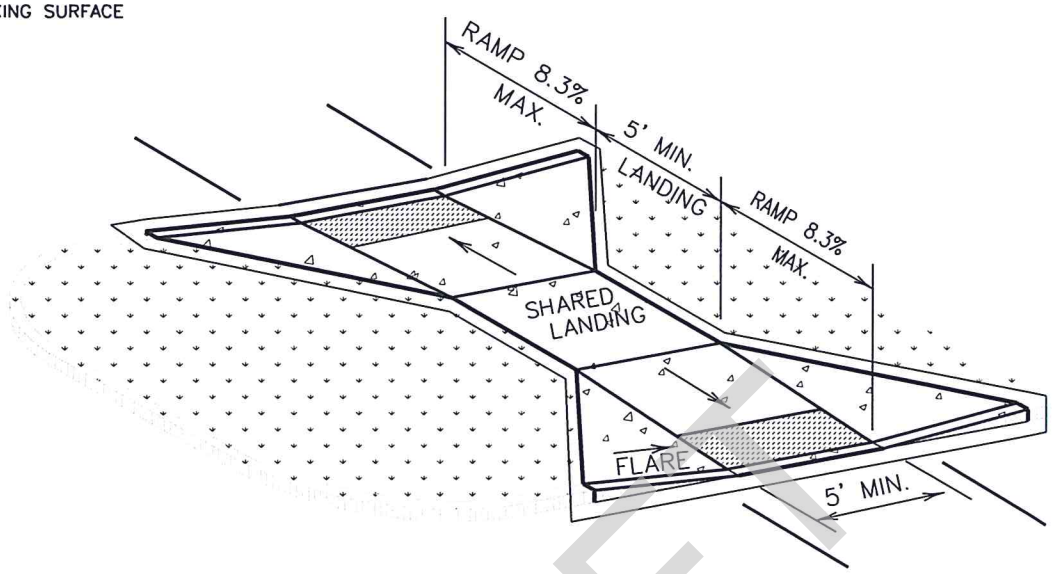

TxDOT TYPE 20

INSTALL DETECTABLE WARNING SURFACE AT EACH END OF CUT-THROUGH RAMP WITH MINIMUM 2' SMOOTH SURFACE BETWEEN. IF MEDIAN IS LESS THAN 6' WIDE, ELIMINATE DETECTABLE WARNING SURFACES.

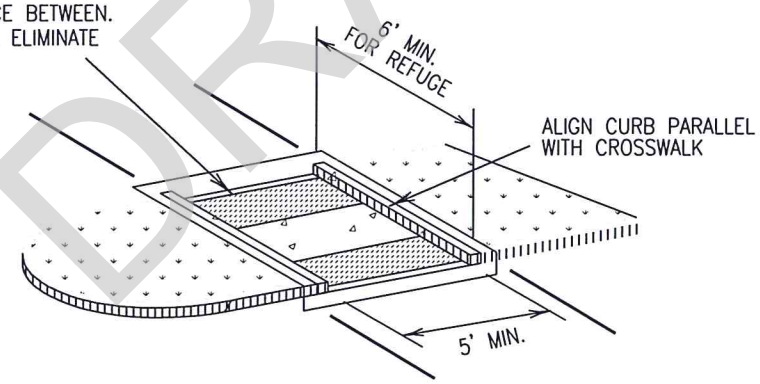

CURB DETAILS ARE SHOWN ELSEWHERE IN THE PLANS.

TxDOT TYPE 21

DRAFT

CITY OF BELTON, TEXAS
DEPARTMENT OF PUBLIC WORKS

CURB RAMP DETAILS AT MEDIAN ISLANDS TYPES 20 & 21

CONSTRUCTION STANDARDS AND DETAILS

T-34
SCALE: N.T.S.
ISSUE DATE: XXX

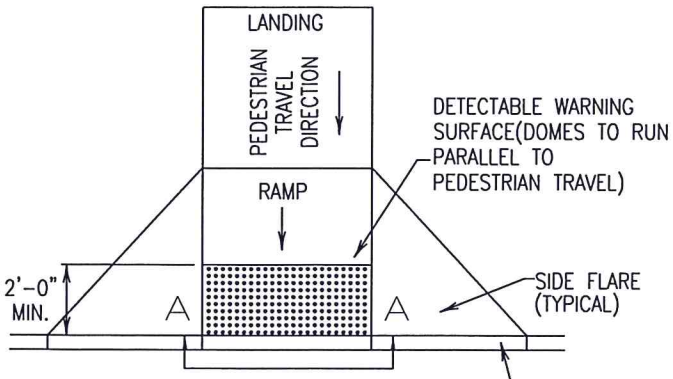

PERPENDICULAR CURB RAMP

TYPICAL PLACEMENT OF DETECTABLE WARNING SURFACE ON SLOPING RAMP RUN.

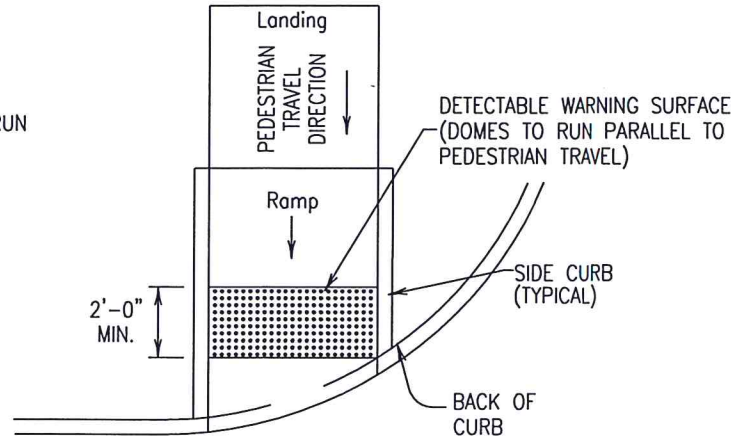

DIRECTIONAL CURB RAMP

TYPICAL PLACEMENT OF DETECTABLE WARNING SURFACE ON SLOPING RAMP RUN.

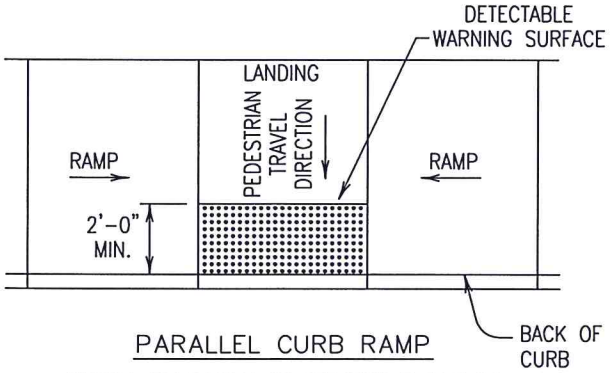

PARALLEL CURB RAMP

TYPICAL PLACEMENT OF DETECTABLE WARNING SURFACE ON LANDING AT STREET EDGE.

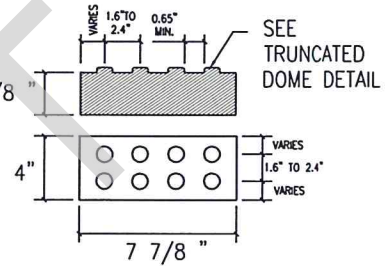

CONCRETE PAVER WITH TRUNCATED DOME SURFACE

DRAFT

GENERAL NOTES

CONCRETE PAVER UNITS SHALL MEET ALL REQUIREMENTS OF ASTM C-936, C-33, AND SHALL BE LAID IN A TWO BY TWO UNIT BASKET WEAVE PATTERN, UNLESS SHOWN OTHERWISE IN THE PLANS.

CONCRETE PAVER UNIT SHALL HAVE A TRUNCATED DOME TOP SURFACE FOR DETECTABLE WARNING TO PEDESTRIANS.

CONCRETE PAVER UNIT COLOR FOR THE RAMP SHALL BE A CONTRASTING COLOR (TO BE APPROVED BY CITY ENGINEER) TO THE ADJACENT SURFACES. THE COLOR OF THE CONCRETE PAVER UNITS SHALL BE SHOWN ELSEWHERE IN THE PLANS. (ADJACENT SURFACES INCLUDE SIDE FLARES).

CONCRETE PAVER UNITS SHALL BE SAW CUT ONLY AND ANY CUT UNIT SHALL BE NOT LESS THAN 25 PERCENT OF A FULL UNIT.

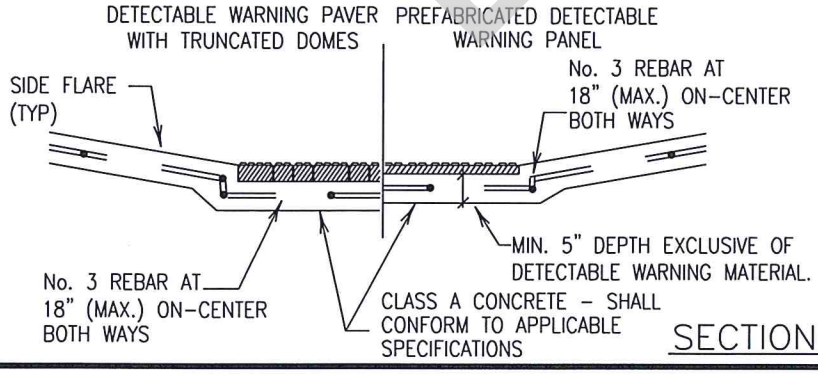

SECTION A-A

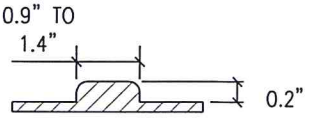

TOP OF TRUNCATED DOME SHALL HAVE DIAMETER OF 50%-65% OF THE BASE DIAMETER.

TRUNCATED DOME

CITY OF BELTON, TEXAS

DEPARTMENT OF PUBLIC WORKS

CURB RAMP DETECTABLE WARNING PAVERS

CONSTRUCTION STANDARDS AND DETAILS

T-35

SCALE: N.T.S.

ISSUE DATE: XXX

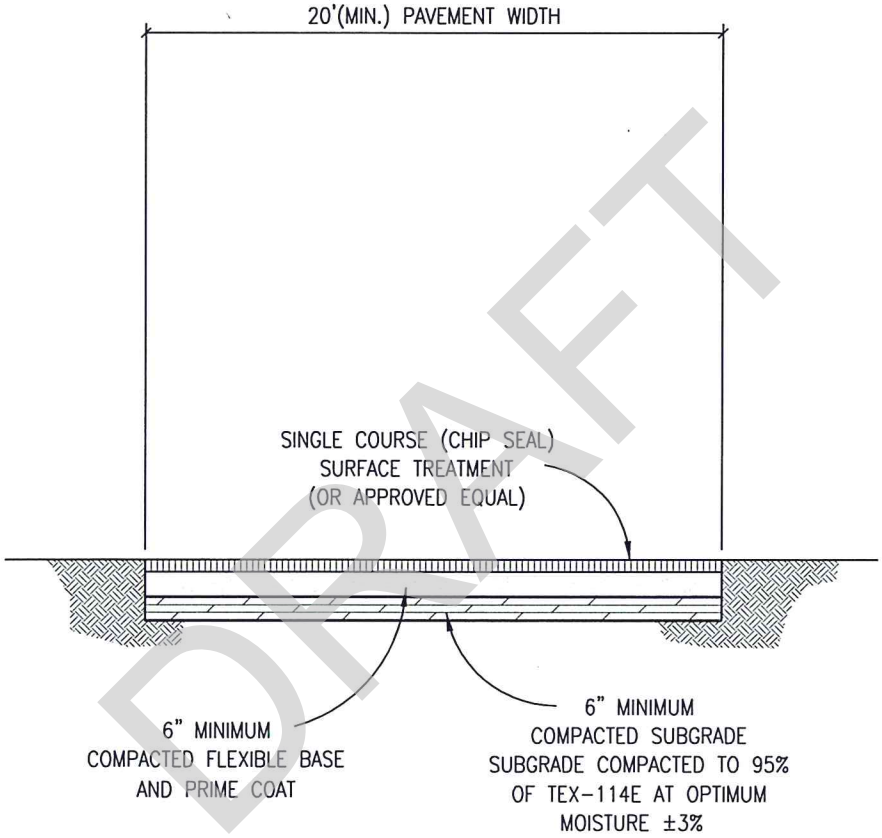

DRAFT

NOTE:

1. PERTAINING TO THIS DETAIL, TEMPORARY IS DEFINED AS A PERIOD OF TIME NO LONGER THAN 1 YEAR.

CITY OF BELTON, TEXAS
DEPARTMENT OF PUBLIC WORKS

TEMPORARY ALL WEATHER DRIVING SURFACE

CONSTRUCTION STANDARDS AND DETAILS

T-36
SCALE: N.T.S.
ISSUE DATE: XXX

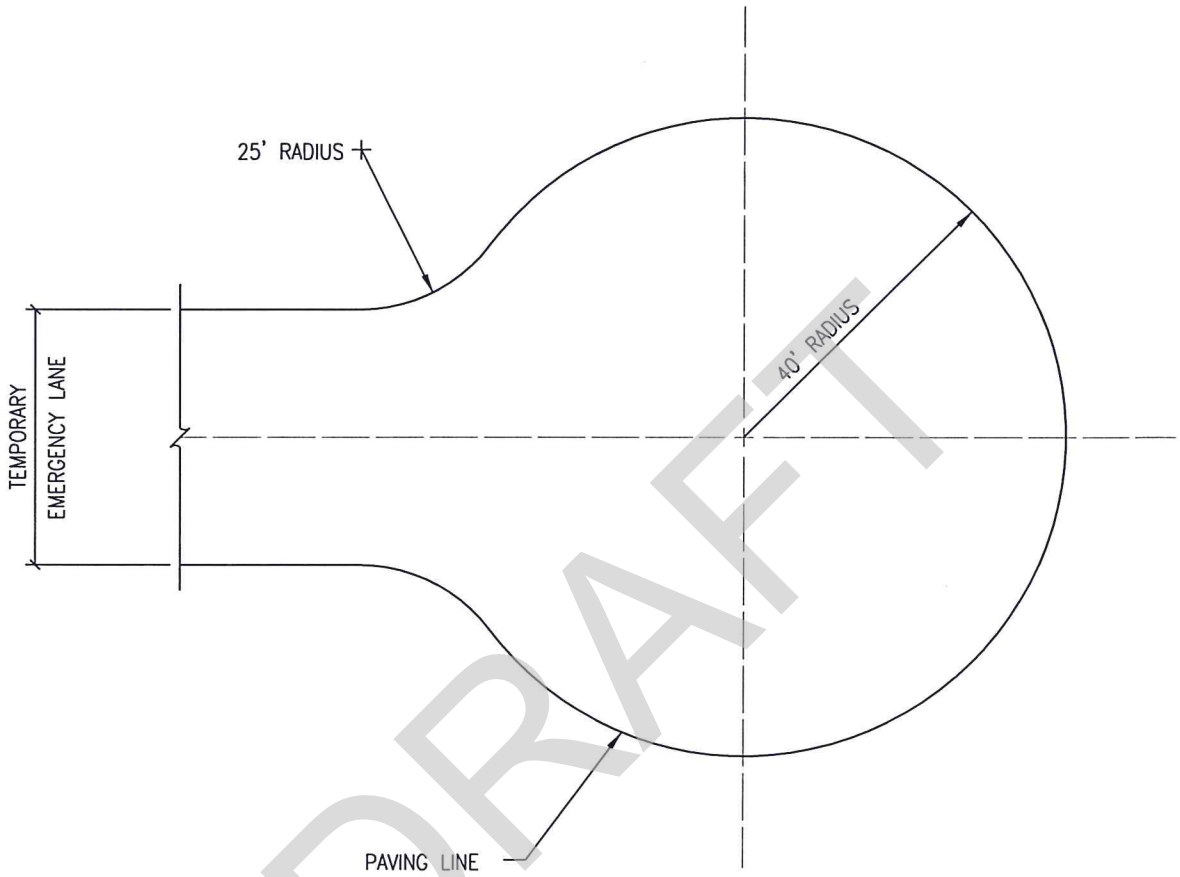

DRAFT

NOTES:

1. CONSTRUCTION OF TEMPORARY ALL WEATHER DRIVING SURFACE TURN AROUND SHALL BE IN ACCORDANCE WITH DETAIL T-36.

CITY OF BELTON, TEXAS
DEPARTMENT OF PUBLIC WORKS

TEMPORARY ALL WEATHER DRIVING SURFACE TURN AROUND

CONSTRUCTION STANDARDS AND DETAILS

T-37
SCALE: N.T.S.
ISSUE DATE: XXX

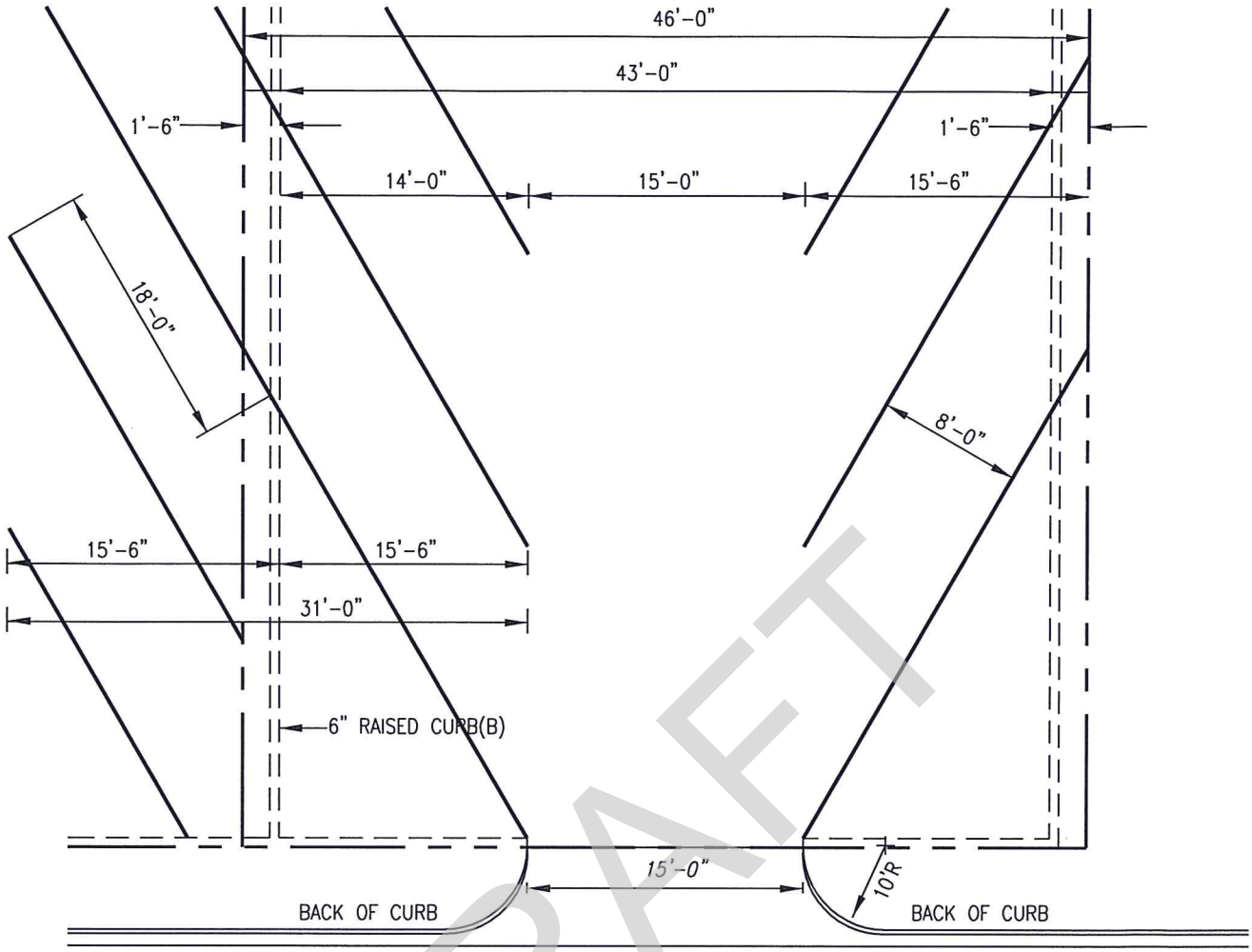

(A) MINIMUM REQUIRED FOR SINGLE ROW OF PARKING.

(B) TOP WIDTH 6"– INCREASE TO 10" IF COMMON BARRIER FOR TWO ROWS OF PARKING.

PROPERTY LINES

STALL LINES

NOTES:

1. ALL DISTANCES SHOWN ARE ABSOLUTE DISTANCES.
2. IF THE DISTANCES FROM THE PROPERTY LINE TO THE BACK OF CURB IS NOT SUFFICIENT TO ALLOW VEHICLES TO EASILY USE THE FIRST PARKING SPACE ON EACH SIDE OF THE FACILITY, THE FIRST TWO SPACES ON EACH SIDE SHALL BE USED AS OPEN SPACE/TRAFFIC QUEUING SPACE AND SHALL NOT COUNT AS PART OF THE CALCULATION OF THE REQUIRED PARKING SPACES.
3. LARGER RADII ON MAJOR ROADS MAY BE REQUIRED.

DRAFT

CITY OF BELTON, TEXAS

DEPARTMENT OF PUBLIC WORKS

30° PARKING STRIPING

CONSTRUCTION STANDARDS AND DETAILS

T-38

SCALE: N.T.S.

ISSUE DATE: XXX

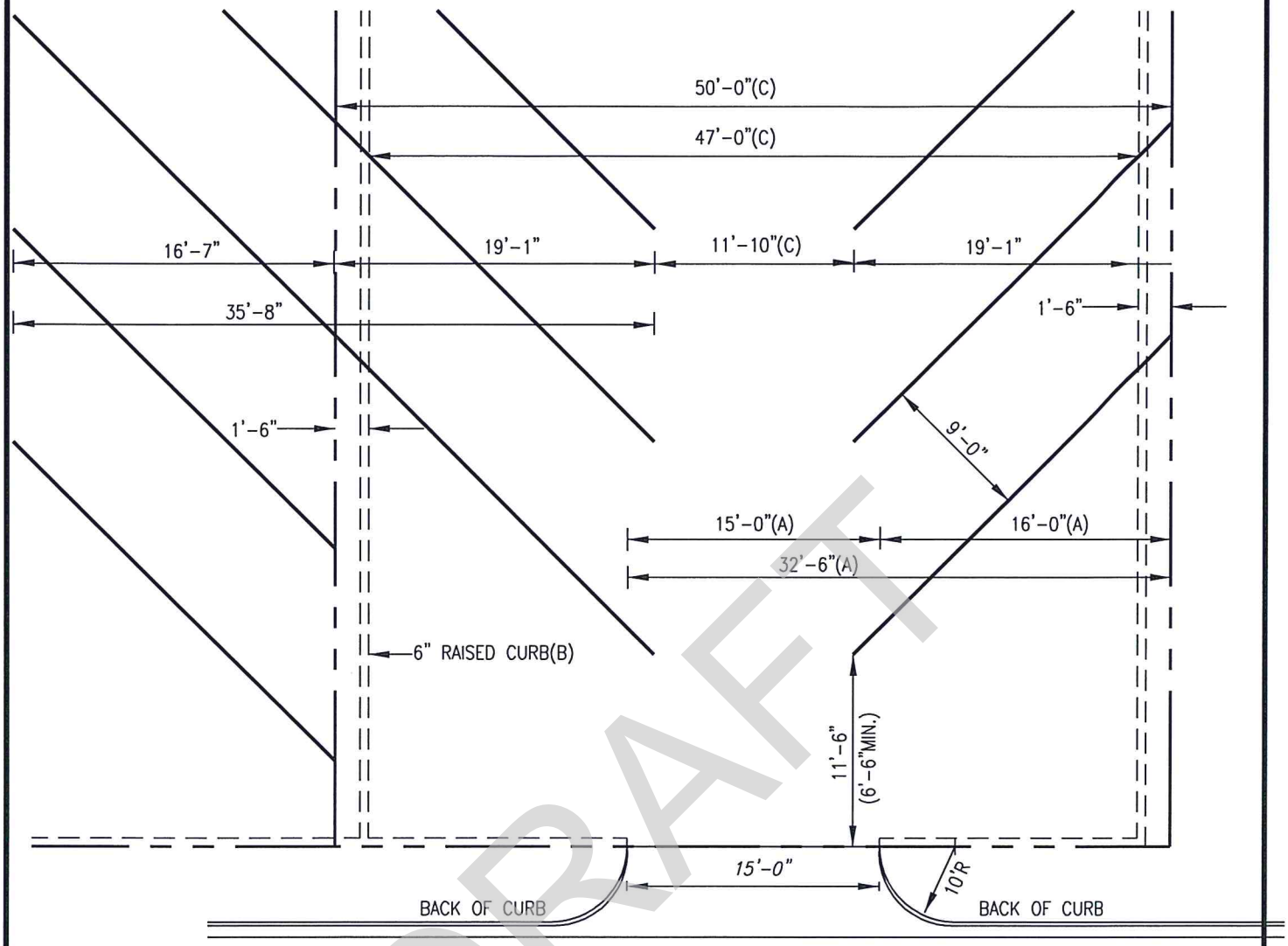

DRAFT

(A) MINIMUM REQUIRED FOR SINGLE ROW OF PARKING.

(B) TOP WIDTH 6"- INCREASE TO 10" IF COMMON BARRIER FOR TWO ROWS OF PARKING.

(C) MINIMUM FOR ONE WAY TRAFFIC IN SHORT LOTS - INCREASE BY 5 FEET FOR TWO WAY TRAFFIC.

PROPERTY LINES

STALL LINES

NOTES:

1. ALL DISTANCES SHOWN ARE ABSOLUTE DISTANCES
2. IF THE DISTANCES FROM THE PROPERTY LINE TO THE BACK OF CURB IS NOT SUFFICIENT TO ALLOW VEHICLES TO EASILY USE THE FIRST PARKING SPACE ON EACH SIDE OF THE FACILITY, THE FIRST TWO SPACES ON EACH SIDE SHALL BE USED AS OPEN SPACE/TRAFFIC QUEUING SPACE AND SHALL NOT COUNT AS PART OF THE CALCULATION OF THE REQUIRED PARKING SPACES
3. LARGER RADII ON MAJOR ROADS MAY BE REQUIRED.

CITY OF BELTON, TEXAS

DEPARTMENT OF PUBLIC WORKS

45° PARKING STRIPING

CONSTRUCTION STANDARDS AND DETAILS

T-39

SCALE: N.T.S.

ISSUE DATE: XXX

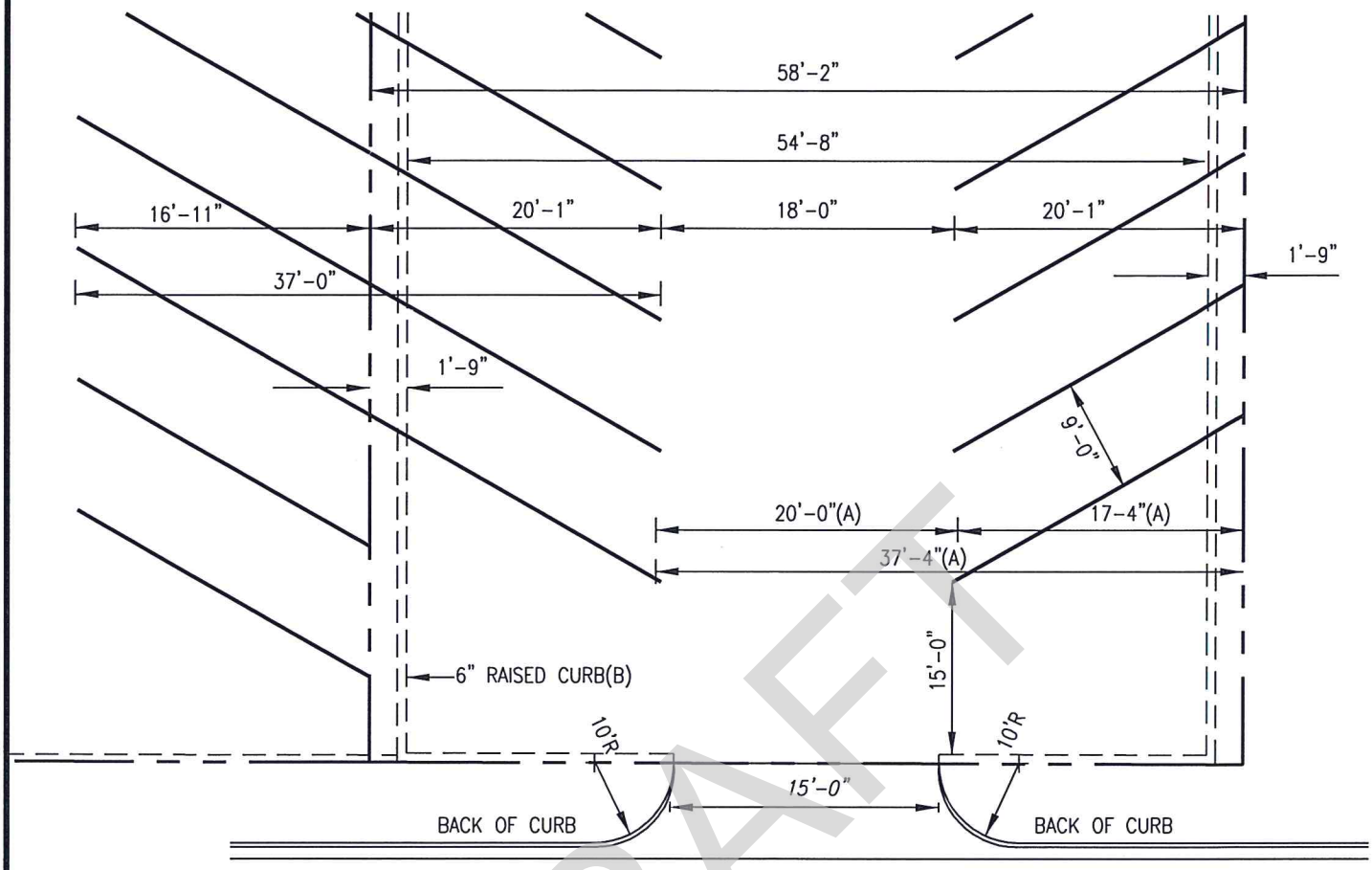

(A) MINIMUM REQUIRED FOR SINGLE ROW OF PARKING.

(B) TOP WIDTH 6"- INCREASE TO 10" IF COMMON BARRIER FOR TWO ROWS OF PARKING.

NOTES:

1. ALL DISTANCES SHOWN ARE ABSOLUTE DISTANCES
2. IF THE DISTANCES FROM THE PROPERTY LINE TO THE BACK OF CURB IS NOT SUFFICIENT TO ALLOW VEHICLES TO EASILY USE THE FIRST PARKING SPACE ON EACH SIDE OF THE FACILITY, THE FIRST TWO SPACES ON EACH SIDE SHALL BE USED AS OPEN SPACE/TRAFFIC QUEUING SPACE AND SHALL NOT COUNT AS PART OF THE CALCULATION OF THE REQUIRED PARKING SPACES
3. LARGER RADII ON MAJOR ROADS MAY BE REQUIRED.

PROPERTY LINES

STALL LINES

DRAFT

CITY OF BELTON, TEXAS

DEPARTMENT OF PUBLIC WORKS

60° PARKING STRIPING

CONSTRUCTION STANDARDS AND DETAILS

T-40

SCALE: N.T.S.

ISSUE DATE: XXX

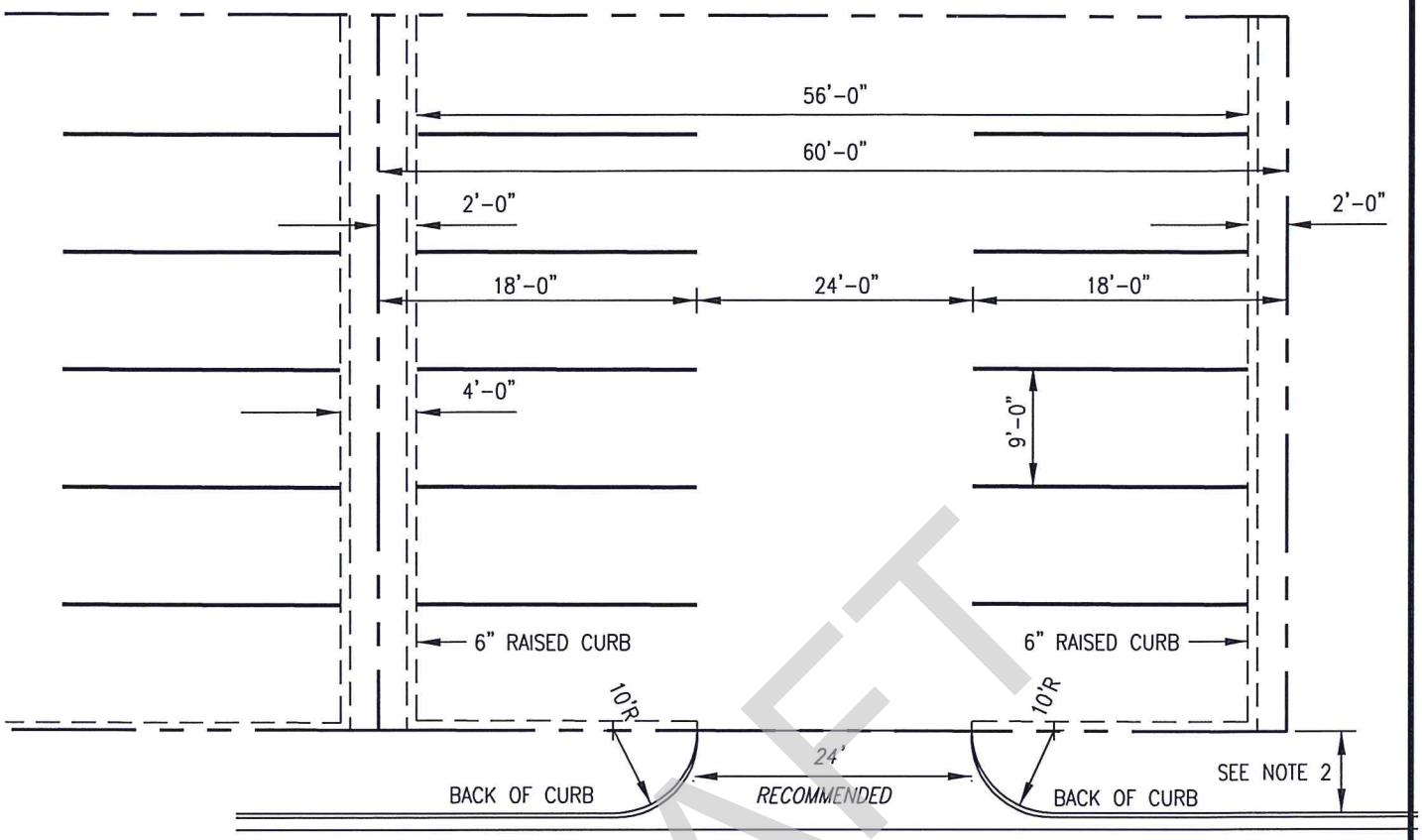

PROPERTY LINES

STALL LINES

NOTES:

1. ALL DISTANCES SHOWN ARE ABSOLUTE DISTANCES
2. IF THE DISTANCES FROM THE PROPERTY LINE TO THE BACK OF CURB IS NOT SUFFICIENT TO ALLOW VEHICLES TO EASILY USE THE FIRST PARKING SPACE ON EACH SIDE OF THE FACILITY, THE FIRST TWO SPACES ON EACH SIDE SHALL BE USED AS OPEN SPACE/TRAFFIC QUEUING SPACE AND SHALL NOT COUNT AS PART OF THE CALCULATION OF THE REQUIRED PARKING SPACES
3. LARGER RADII ON MAJOR ROADS MAY BE REQUIRED.

DRAFT

CITY OF BELTON, TEXAS

DEPARTMENT OF PUBLIC WORKS

90° PARKING STRIPING

CONSTRUCTION STANDARDS AND DETAILS

T-41

SCALE: N.T.S.

ISSUE DATE: XXX

NOTE:

TO ALLEVIATE TRAFFIC CONGESTION AND PROVIDE A PEDESTRIAN-FRIENDLY ENVIRONMENT, CORNER BULB-OUTS SHALL BE CONSIDERED. BULB-OUTS EXPAND THE STREET CORNER, INCREASE PEDESTRIAN VISIBILITY, AND REDUCE PEDESTRIAN CROSSING DISTANCES. CORNER BULB-OUTS SHALL EXTEND APPROX. 6 FEET FROM THE FACE OF THE CURB, WITH A 10-FOOT OUTSIDE RADIUS FOR STREET SWEEPING. BULB-OUTS SHALL HAVE A MINIMUM LENGTH OF 20 FEET.

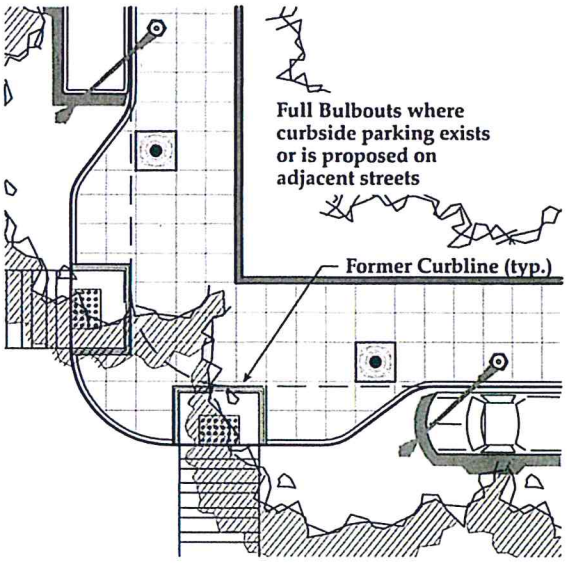

Full Bulb-Out

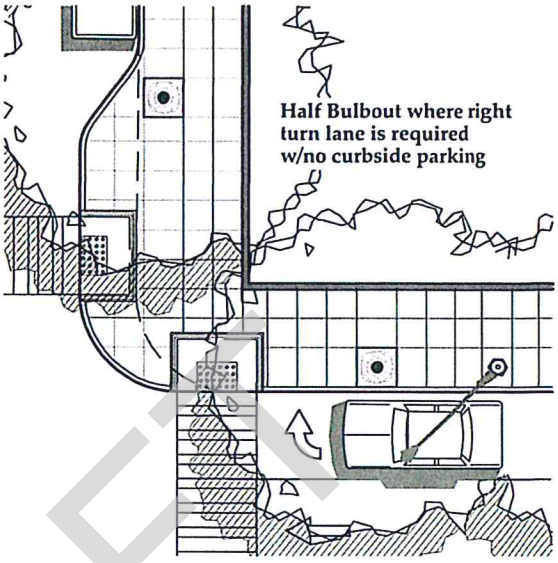

Half Bulb-Out - Right Turn

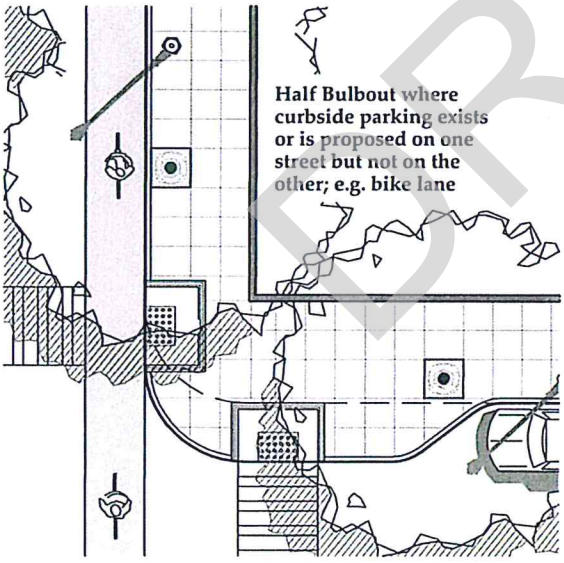

Half Bulb-Out - Bike Lane

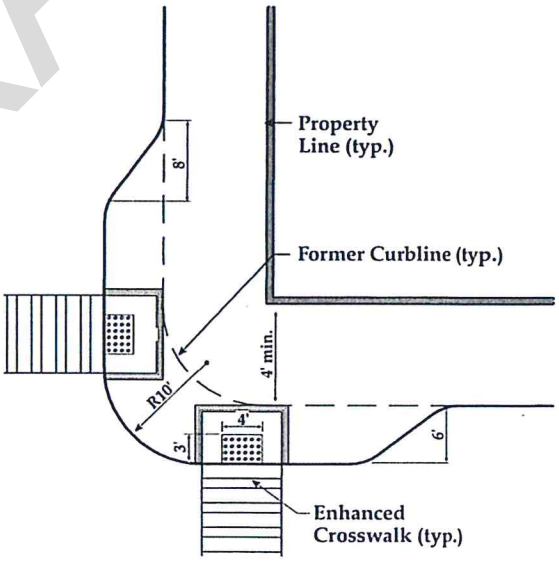

Typical Dimensions

DRAFT

CITY OF BELTON, TEXAS

DEPARTMENT OF PUBLIC WORKS

CORNER BULB-OUTS

CONSTRUCTION STANDARDS AND DETAILS

T-42

SCALE: N.T.S.

ISSUE DATE: XXX

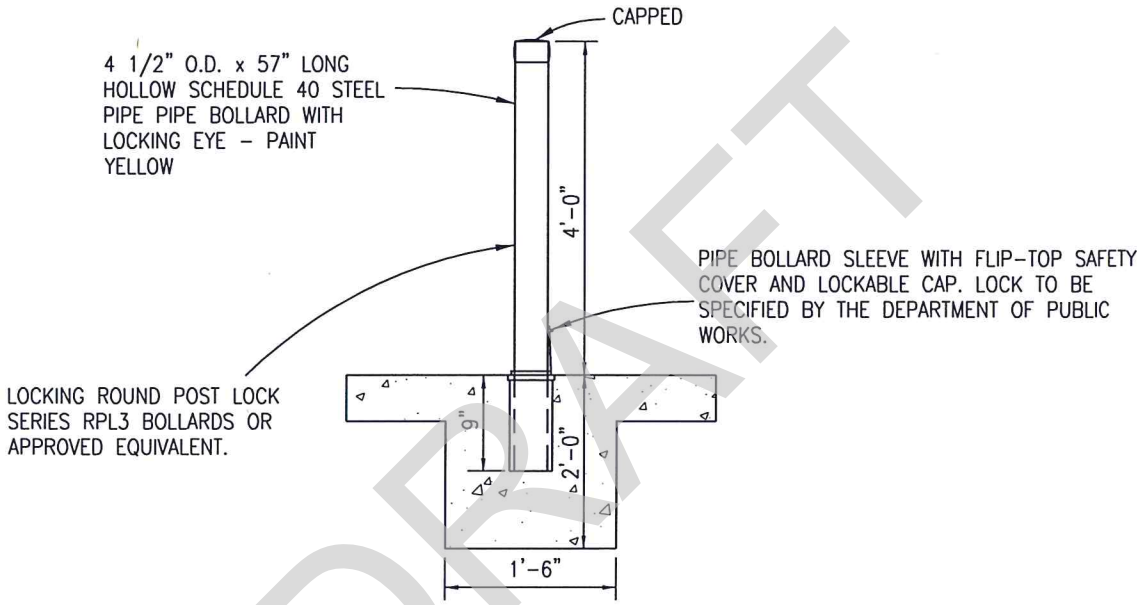

DRAFT

CITY OF BELTON, TEXAS
DEPARTMENT OF PUBLIC WORKS

REMOVABLE BOLLARD

CONSTRUCTION STANDARDS AND DETAILS

T-43
SCALE: N.T.S.
ISSUE DATE: XXX

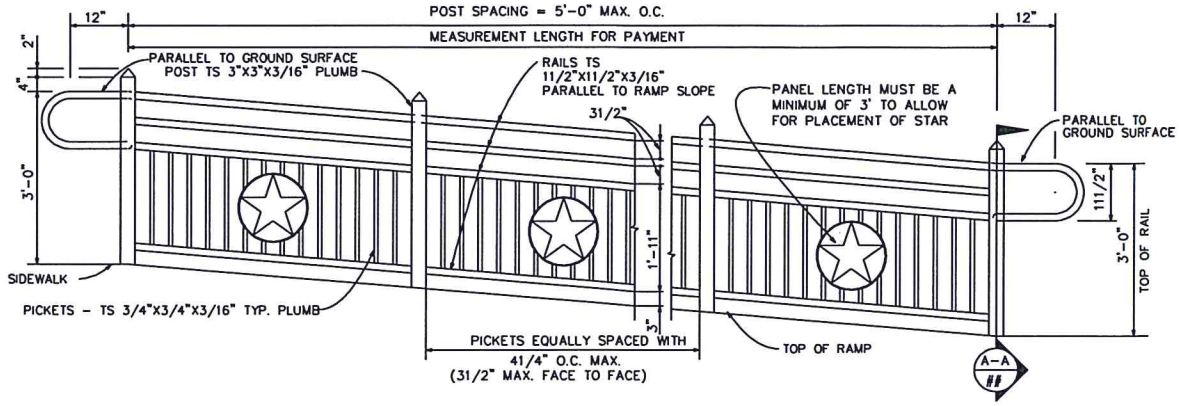

NOTE:
TYPE D HANDRAIL ELIMINATES THE GRASPING BAR AND RAIL RETURNS.
ALL OTHER ELEMENTS REMAIN THE SAME.
TYPE D HANDRAIL SHALL BE USED ONLY FOR A BARRIER.

TYPE A HANDRAIL ON RAMP

(USED IN ALL CASES UNLESS THE USE WILL CREATE A SITE OBSTRUCTION)

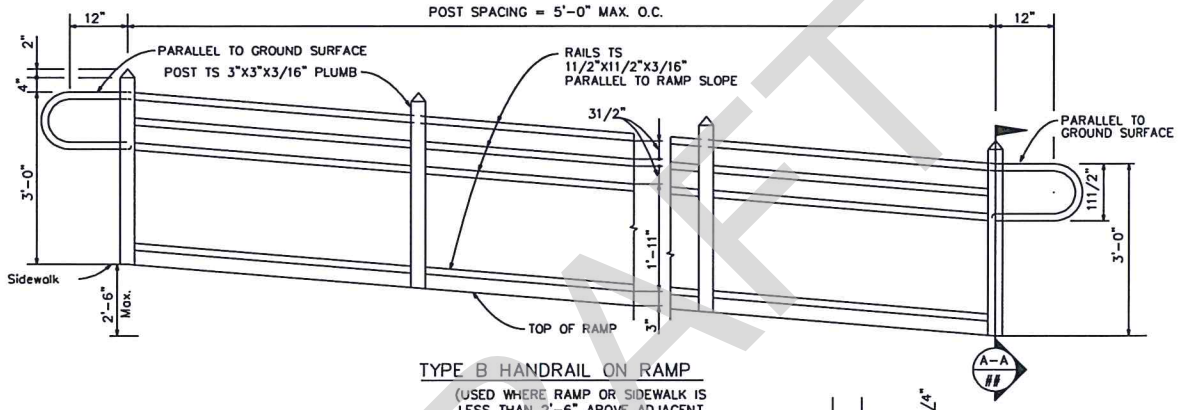

TYPE B HANDRAIL ON RAMP

(USED WHERE RAMP OR SIDEWALK IS LESS THAN 2'-6" ABOVE ADJACENT SURFACE AND WHERE TYPE A RAIL CREATES A SIGHT OBSTRUCTION.)

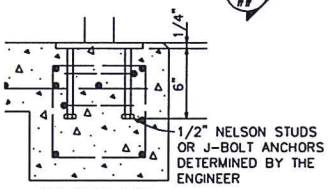

WELD PLATE ANCHOR

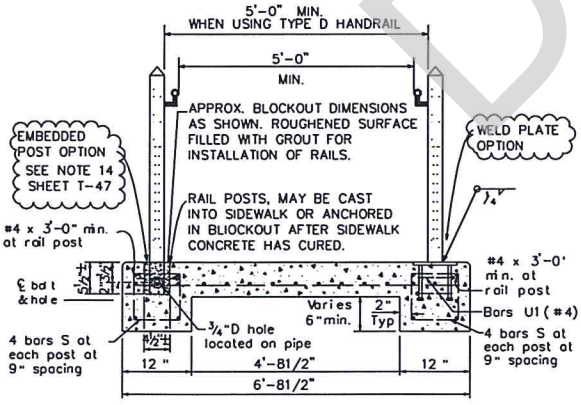

ELEVATION

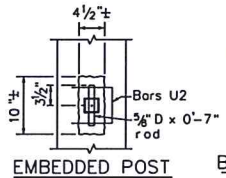

EMBEDDED POST ANCHOR

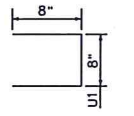

BARS U (#)

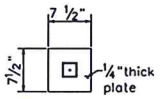

BASE PLATE DETAILS

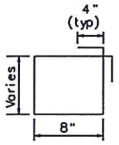

BARS S (#)

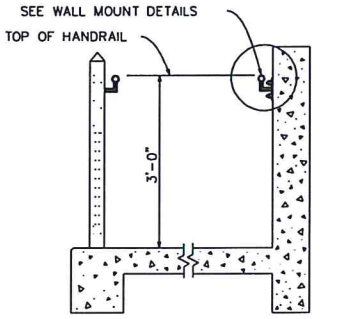

COMBINATION OF HANDRAIL ON WALL AND RAMP

DRAFT

CITY OF BELTON, TEXAS

DEPARTMENT OF PUBLIC WORKS

TxDOT WACO DISTRICT HANDRAIL

CONSTRUCTION STANDARDS AND DETAILS

T-44

SCALE: N.T.S.

ISSUE DATE: XXX

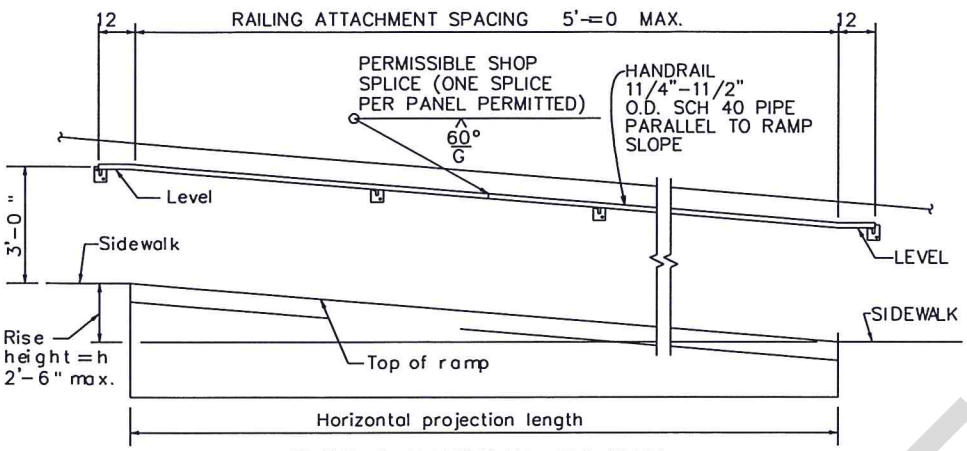

TYPE C HANDRAIL ON WALL

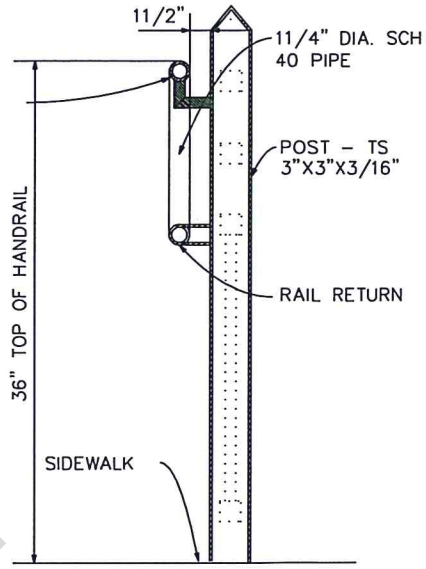

POST SECTION A-A ##

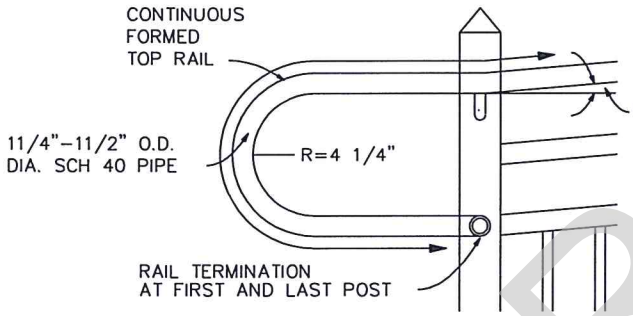

RAIL RETURN DETAIL

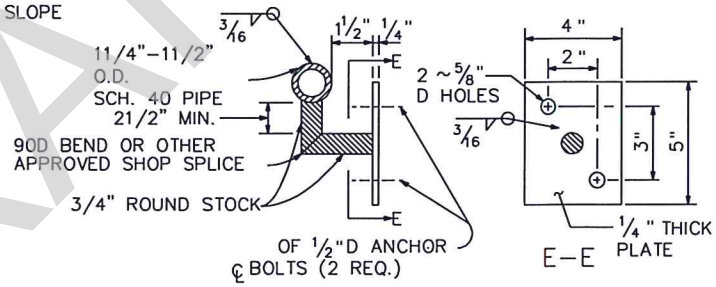

WALL MOUNT DETAILS

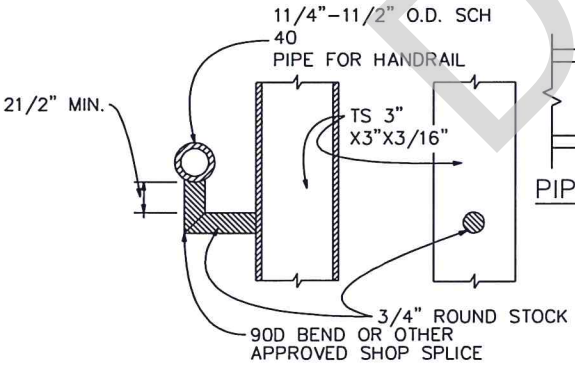

HANDRAIL TO POST MOUNT DETAILS

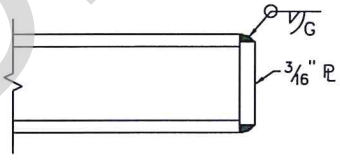

PIPE END DETAILS

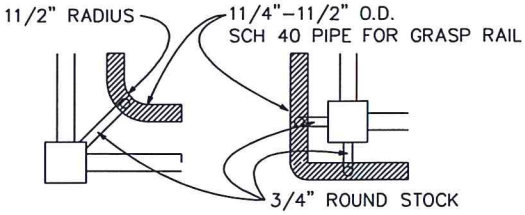

INSIDE CORNER | OUTSIDE CORNER

HANDRAIL ATTACHMENT DETAIL

DRAFT

CITY OF BELTON, TEXAS

DEPARTMENT OF PUBLIC WORKS

TxDOT WACO DISTRICT HANDRAIL (CONTINUED)

CONSTRUCTION STANDARDS AND DETAILS

T-45

SCALE: N.T.S.

ISSUE DATE: XXX

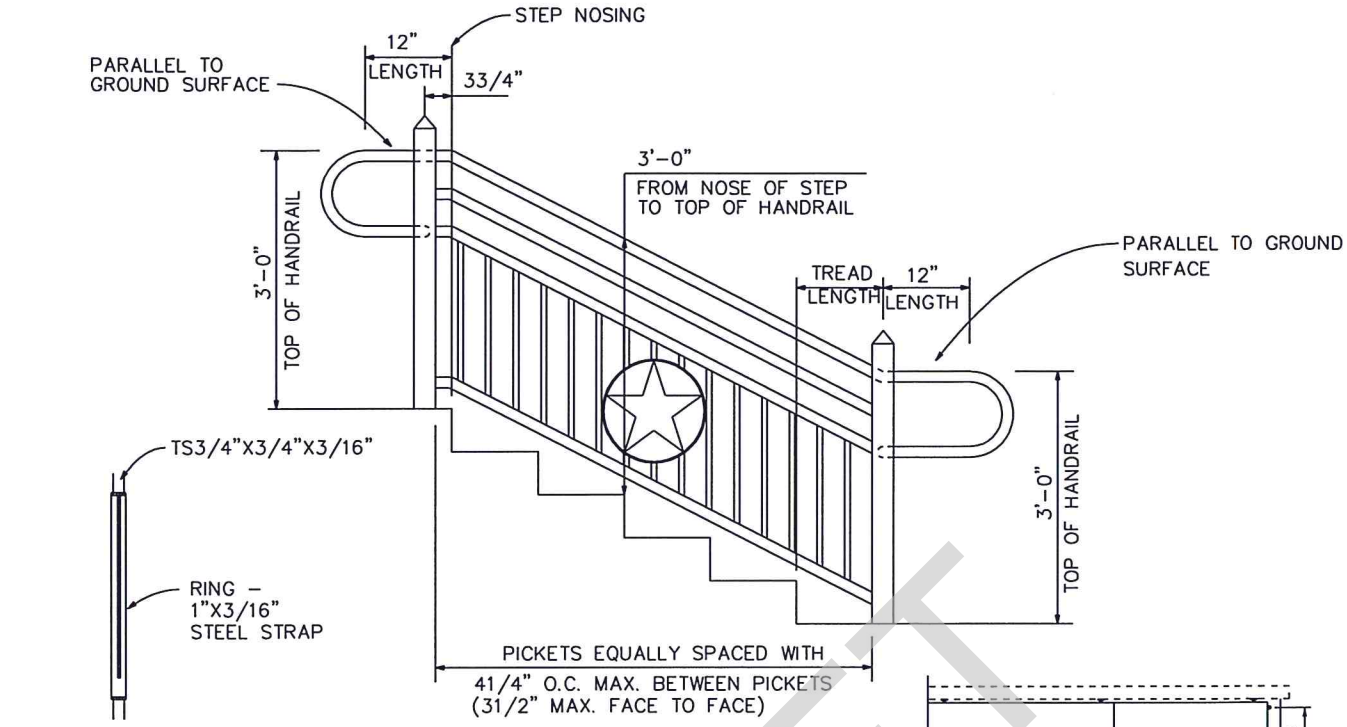

STAR SECTION B–B ##

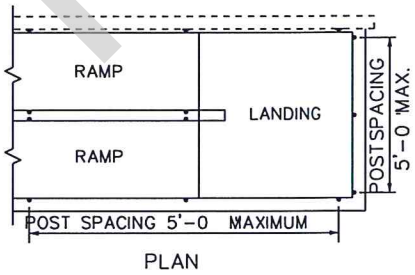

PLAN

MULTI–LEVEL RAMP

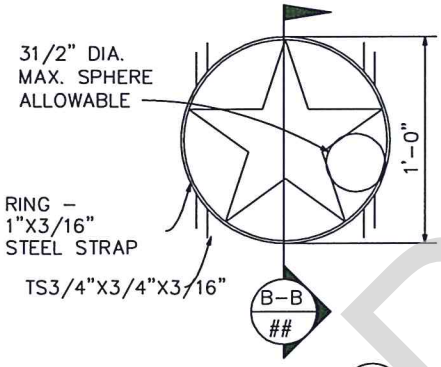

STAR DETAIL 1 ##

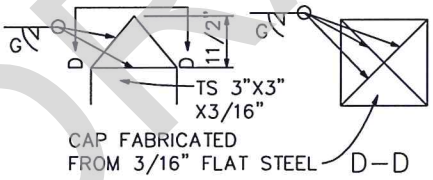

POST CAP DETAIL

R = RADIUS
D = DIAMETER

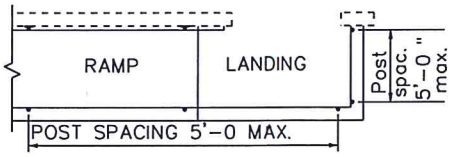

PLAN

SINGLE–LEVEL RAMP

GENERAL NOTES

1. THE DESIGNER SHOULD CAREFULLY EVALUATE THE SITE CONDITIONS TO DETERMINE THE NECESSITY AND EXTENT OF THE WARRANT FOR HANDRAIL.
2. THE DESIGNER SHOULD USE CAREFUL JUDGEMENT IN SPECIFYING THE TYPE OF HANDRAIL TO BE USED.
3. TYPE "A" HANDRAIL IS TO BE USED IN ALL CASES, UNLESS ITS USE WILL CREATE A SITE OBSTRUCTION, OR IT IS ADJACENT TO THE WALL OF A BUILDING OR A RETAINING WALL.
4. TYPE HANDRAIL IS TO BE USED IN CASES WHERE THE TYPE 'A' HANDRAIL CREATES A SITE OBSTRUCTION. IF TYPE 'B' HANDRAIL IS USED, THE RAMP AND/OR SIDEWALK HEIGHT ABOVE ANY ADJACENT SURFACE SHALL NOT BE MORE THAN 2'–6" TYPE 'B' HANDRAIL CAN BE USED ADJACENT TO CONCRETE BLOCK RETAINING WALLS (KEYSTONE OR SIMILAR TYPE WALL CONSTRUCTION).

DRAFT

CITY OF BELTON, TEXAS
DEPARTMENT OF PUBLIC WORKS

TxDOT WACO DISTRICT HANDRAIL (CONTINUED)

CONSTRUCTION STANDARDS AND DETAILS

T–46
SCALE: N.T.S.
ISSUE DATE: XXX

5. TYPE D HANDRAIL IS TO BE USED ONLY AS A BARRIER.

6. WHERE HANDRAIL IS PLACED ADJACENT TO THE WALL OF A BUILDING, TYPE 'B' HANDRAIL IS TO BE USED UNLESS THERE IS AN AGREEMENT WITH THE BUILDING OWNER TO USE TYPE 'A' HANDRAIL.

7. HANDRAIL 'C' IS TO BE USED ON CONCRETE RETAINING WALLS, PROVIDED THE RETAINING WALL IS TxDOT PROPERTY, OTHERWISE, USE HANDRAIL 'B', OR FOR SCREENING PURPOSES, USE HANDRAIL 'A'.

8. IF HANDRAIL IS PLACED ON A RETAINING WALL OR THE WALL OF A BUILDING, AND THE WALL SURFACE IS IRREGULAR, ENSURE THERE IS A MINIMUM OF 1-1/2" CLEARANCE BETWEEN THE WALL SURFACE AND THE HANDRAIL.

9. IF HANDRAIL IS USED ON A RAMP FOR ITS INTENDED PURPOSE OF ACCESSIBILITY ASSISTANCE, IT MUST BE PLACED ON BOTH SIDES OF THE RAMP. IF HANDRAIL IS USED ONLY AS A DROP OFF OR FALL BARRIER TO PEDESTRIAN TRAFFIC. IT MAY BE USED AS NECESSARY ON ONLY ONE SIDE OF A RAMP OF SIDEWALK.

10. DESIGN CONFORMS TO TEXAS DEPARTMENT OF LICENSING AND REGULATION (TDLR) TEXAS ACCESSIBILITY STANDARDS (TAS). AMERICANS WITH DISABILITIES ACT ACCESSIBILITY GUIDELINES (ADAAG), AND AASHTO SPECIFICATIONS. HANDRAIL MUST BE INSTALLED IN COMPLIANCE WITH THESE STANDARDS AND GUIDELINES.

11. HANDRAILS SHALL NOT ROTATE WITHIN THEIR FITTINGS.

12. HANDRAILS SHALL BE A CONSISTENT HEIGHT ABOVE RAMP SURFACE.

13. SEE SIDEWALK AND RAMP DETAILS AND/OR PLAN DRAWINGS FOR RAMP SLOPES, DIMENSIONS, CONFIGURATIONS, AND REINFORCING STEEL. THIS STANDARD SHOWS ADDITIONAL REINFORCING STEEL REQUIRED FOR HANDRAIL.

14. POSTS ARE TO BE ATTACHED TO THE CONCRETE UTILIZING WELD PLATES OR EMBEDDED POSTS. BOLT DOWN ANCOR PLATES ARE NOT ACCEPTABLE. WELD PLATES ARE SPECIFICALLY TO BE USED WHERE THERE IS A HIGH POSSIBILITY THE HANDRAIL CAN BE DAMAGED BY VEHICLES.

15. MEASUREMENT FOR PAYMENT WIL BE THE DIMENSION BETWEEN THE CENTERLINE OF THE OUTSIDE POSTS. THE DIMENSION OF THE RAIL RETURN WILL NOT BE INCLUDED IN THE MEASUREMENT FOR PAYMENT, BUT WILL BE CONSIDERED SUBSIDIARY TO ITEM 450.

16. MATERIAL FOR POSTS AND HANDRAILS SHALL BE ASTM A53 GR B, OR A501, WELD PLATES SHALL BE A36.

17. IF THE RAIL RETURN CREATES A HAZARD OR OBSTRUCTION, IT MAY BE TURNED OUTWARD 90° TO THE DIRECTION OF THE HANDRAIL.

18. ALL COMPONENTS SHALL BE PAINTED IN STRICT ACCORDANCE TO TxDOT SPECIFICATION ITEM 446, CLEANING AND PAINTING STEEL, SYSTEM II, CLASS A BLAST CLEANING. THE PAINT SHALL BE ACRYLIC LATEX. PRIMER AND PAINT SHALL BE FROM THE SAME MANUFACTURER. THE SURFACE PREPARATION SHALL MEET THE REQUIREMENTS OF SSPC-SP 10. THE PAINT COLOR SHALL BE SELECTED BY THE TxDOT DISTRICT LANDSCAPE ARCHITECT. A LIST OF PRE-APPROVED STRUCTURAL STEEL PAINT MANUFACTURERS CAN BE FOUND ON TxDOT'S WEBSITE.

19. ALL WELDS SHALL BE 3/16" x 3/16" FILET FULL PERIMETER ON ALL CONNECTIONS, UNLESS OTHERWISE SHOWN ON THE PLANS.

20. ANCHOR BOLTS FOR HANDRAIL ATTACHED TO A RETAINING WALL SHALL BE PLACED USING ON ADHESIVE DOWELING SYSTEM APPROVED BY THE ENGINEER. ANCHOR BOLTS SHALL HAVE AN ALLOWABLE CAPACITY OF 2400 lbs IN TENSION AND 2300 lbs IN SHEAR. INSTALLATION OF THE ANCHOR BOLTS, INCLUDING HOLE DEPTH AND DIAMETER, SHALL BE IN ACCORDANCE WITH THE MANUFACTURER'S RECOMMENDATION. IF REQUIRED BY THE ENGINEER, 3 OF THE FIRST 10 ANCHORS, AND 5% OF THE REMAINING ANCHORS SHALL BE TESTED TO 70% OF THE MINIMUM YIELD. THE CONTRACTOR SHALL PROVIDE A SUITABLE RAM, PUMP, RESSURE GAUGE, AND REACTION SYSTEM.

21. ANCHOR BOLTS FOR THE ATTACHMENT OF HANDRAIL TO CONCRETE RETAINING WALL SHALL CONFORM TO ASTM A36 OR APPROVED EQUAL. NUTS FOR ANCHOR BOLTS SHALL CONFORM TO ASTM A563 GR A OR BETTER HEAVY HEX, THREADS FOR ANCHOR BOLTS AND NUTS SHALL BE ROLLED OR CUT THREADS OF UNIFIED NATIONAL COARSE (UNC) THREAD SERIES. BOLTS AND NUTS SHALL HAVE CLASS 2A AND 2B FIT TOLERANCES. WASHERS SHALL BE INCLUDED WITH EACH BOLT.

22. EXPOSED EDGES OF HANDRAIL AND POSTS SHALL BE ROUNDED OR CHAMFERED BY GRINDING. FINISHED HANDRAIL SYSTEM SHALL HAVE NO BURRS.

23. WELD PLATES, OTHER ANCHORING SYSTEMS, RAIL RETURNS, POST CAPS, STAR EMBLEM, AND PAINTING ARE TO BE INCLUDING IN THE UNIT BID PRICE FOR RAILING.

24. ERECTION DRAWINGS SHOWING PANEL LENGTHS, SPLICE LOCATIONS, RAIL POST SPACING, STAR EMBLEM PLACEMENT, AND ANCHORING SELECTION SHALL BE SUBMITTED TO THE ENGINEER FOR APPROVAL PRIOR TO INSTALLATION OF ANY HANDRAIL COMPONENT. ANY HANDRAIL COMPONENT INSTALLATION PRIOR TO APPROVAL OF ERECTION DRAWING WILL BE SUBJECT TO REJECTION.

DRAFT

PROPERTY OWNER/TENANT IS RESPONSIBLE FOR MAINTAINING DUMPSTER ENCLOSURES AND ADEQUATE ACCESS / EGRESS. DUMPSTER PADS MAY NOT BE LOCATED IN RIGHT OF WAY OR FIRE LANES.

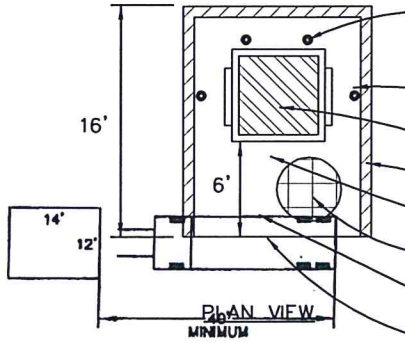

4" DIA. STEEL PIPE-CONCRETE FILLED SET A MIN. OF 2" BELOW GRADE WITH 16" DIA. CONC. FOOTING SET 1' FROM SCREEN.

CONCRETE PAD – 8" 3000 PSI IN 28 DAYS.

COMMERCIAL GARBAGE CONTAINER (SIZE VARIES)

SCREENING PER 51.16 (D)

SLOPE 1/4" PER FOOT TO FRONT

#3 REBAR, 12" O.C.C.W.

6" MIN. CLEAR DISTANCE FROM EDGE OF PAD TO CONTAINER.

THE FRONT OF THE CONCRETE PAD SHALL BE LEVEL WITH THE APPROACHING DRIVE.

~~HORIZONTAL CLEAR ZONE FOR TRUCKS APPROACHING A COMMERCIAL GARBAGE SHALL BE A MIN. OF 40' FROM THE FRONT OF THE PAD.~~

24' VERTICAL CLEAR ZONE
(CHECK FOR TREES, UTILITY WIRES ETC.)

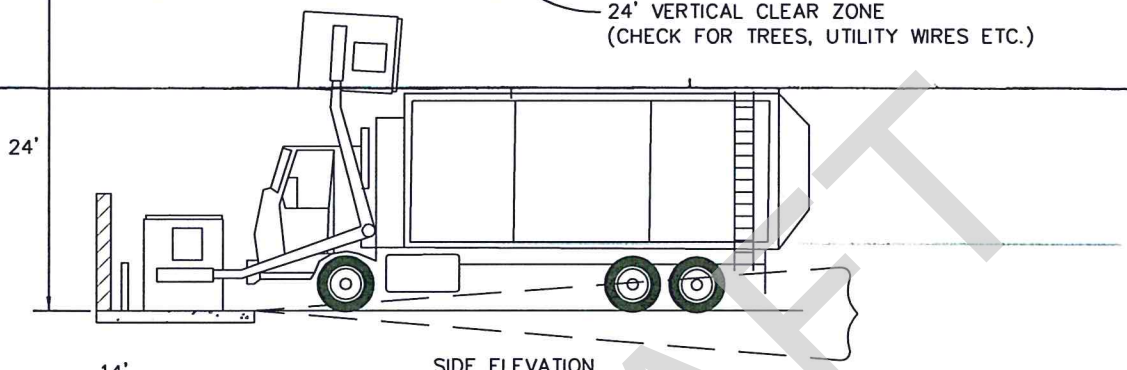

SIDE ELEVATION
N.T.S.

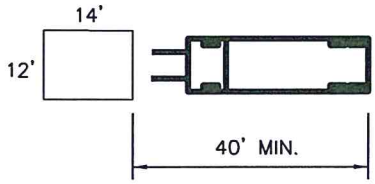

NOTE:

IT SHALL BE THE RESPONSIBILITY OF THE OWNER TO OPEN GATES USED TO ENCLOSED CONTAINERS PRIOR TO COLLECTION.

PROPERTY OWNER/TENANT IS RESPONSIBLE FOR MAINTAINING DUMPSTER ENCLOSURES AND ADEQUATE ACCESS/EGRESS. DUMPSTER PADS MAY NOT BE LOCATED IN RIGHT OF WAY OR FIRE LANES.

HORIZONTAL CLEAR ZONE FOR TRUCKS APPROACHING A COMMERCIAL GARBAGE SHALL BE A MIN. OF 40' FROM THE FRONT OF THE PAD.

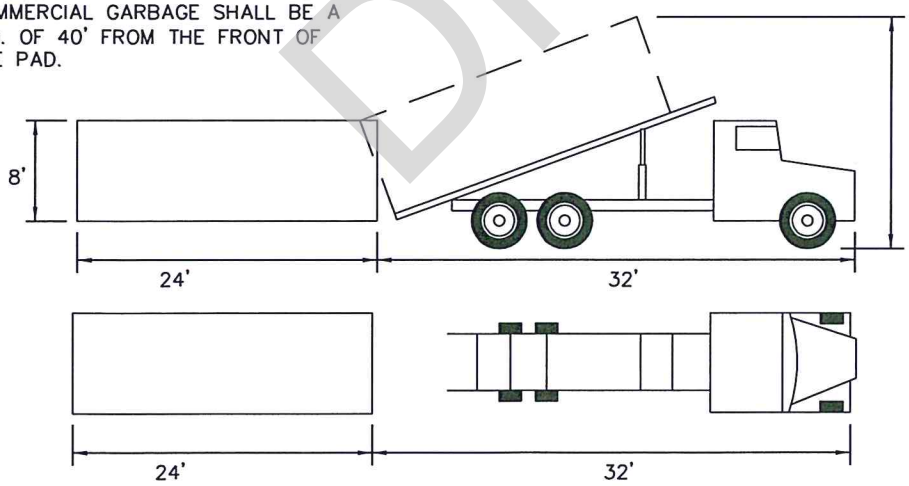

NOTE:
NEED MINIMUM CLEARANCE
12'W X 60'L X 24'H

DRAFT

CITY OF BELTON, TEXAS
DEPARTMENT OF PUBLIC WORKS

SOLID WASTE INFRASTRUCTURE

CONSTRUCTION STANDARDS AND DETAILS

T-48
SCALE: N.T.S.
ISSUE DATE: XXX

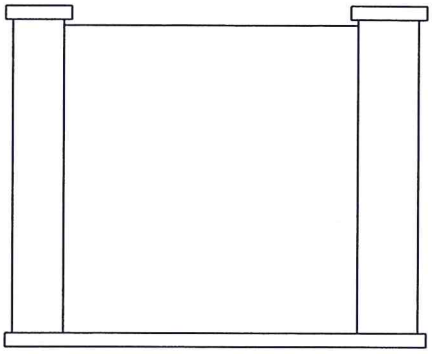

SIDE VIEW

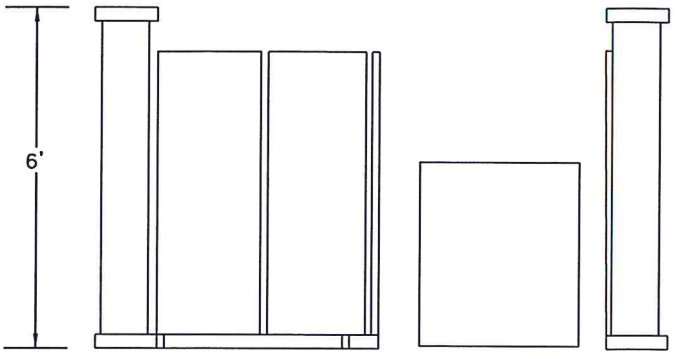

PARTIAL FRONT VIEW

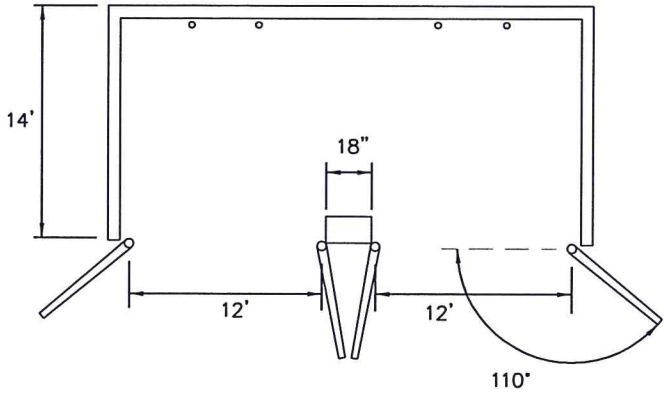

TOP VIEW

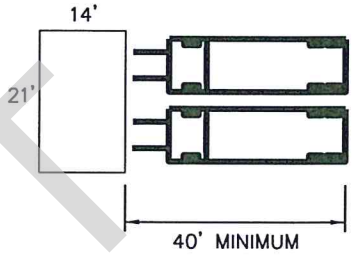

HORIZONTAL CLEAR ZONE FOR TRUCKS APPROACHING A COMMERCIAL GARBAGE SHALL BE A MIN. OF 40' FROM THE FRONT OF THE PAD.

ALL GATES SHALL BE CONSTRUCTED IN MANNER TO INSURE THAT GATE CAN SUPPORT ITS OWN WEIGHT, IN A FREE SWINGING POSITION. METAL DOORS SHALL BE PRIMED AND PAINTED.

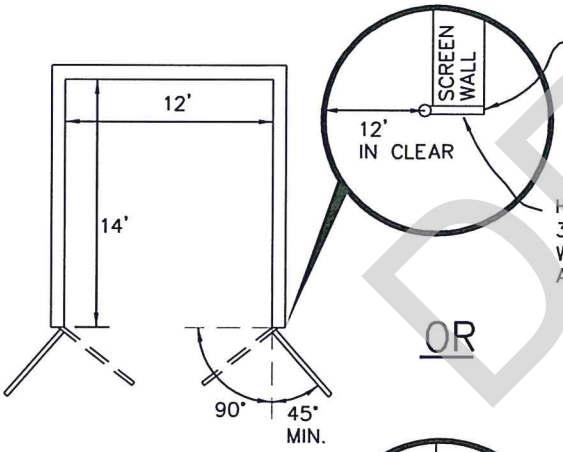

"HINGE ANCHOR PLATE" MIN. 1/4" STEEL PLATE FOR HINGE ATTACHMENT.

HINGE PLATE MINIUM 3/16" STEEL; WELDED TO HINGE ANCHOR PLATE.

OR

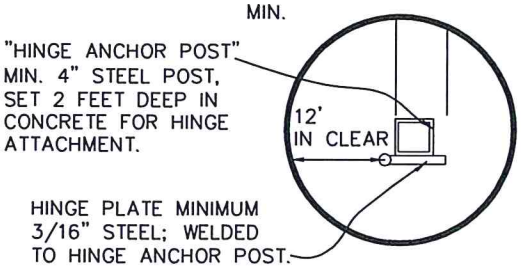

"HINGE ANCHOR POST" MIN. 4" STEEL POST, SET 2 FEET DEEP IN CONCRETE FOR HINGE ATTACHMENT.

HINGE PLATE MINIMUM 3/16" STEEL; WELDED TO HINGE ANCHOR POST.

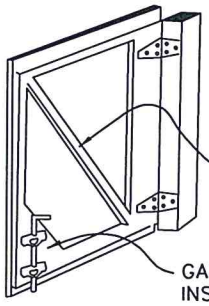

ALL GATE SHALL HAVE CROSS MEMBER FOR BRACING.

GATE STOPS MUST BE INSTALLED ON ALL GATES TO SECURE GATE IN OPEN OR CLOSED POSITIONS.

NOTE:

ENCLOSURES CONTAINING MULTIPLE DUMPSTERS; 2-DUMPSTERS W/O CENTER POST FOR GATES 21 FT. GATE OPENING X 14 FT. DEEP

TWO OR MORE DUMPSTERS- 12 FT. IN CLEAR GATE OPENINGS W/ CENTER POST X 14FT. DEEP

DRAFT

CITY OF BELTON, TEXAS

DEPARTMENT OF PUBLIC WORKS

SOLID WASTE INFRASTRUCTURE (CONTINUED)

CONSTRUCTION STANDARDS AND DETAILS

T-49

SCALE: N.T.S.

ISSUE DATE: XXX

SECTION 2 – DRAINAGE AND STORMWATER

2.01 General

This section presents guidelines and methods for determining stormwater runoff for watersheds within the City of Belton and its ETJ as well as outlining the stormwater control measures. It describes the method used for determining storm runoff from watersheds of less than 200 acres. It then briefly describes hydrologic models which can be used on watersheds greater than 200 acres. The recommended models for the major watersheds in Belton are provided.

There are several methods for determining the appropriate storm runoff from a watershed. The Rational Method may be used as the primary tool for the determination of peak stormwater runoff rates from areas 200 acres or less and is especially useful for the design of storm sewer systems. In instances where detention is modeled, a hydrograph producing method is required, such as the Soil Conservation Service Tabular Method, TR-20, HEC-1 or HEC-RAS. The most extensively used methodology for computing runoff hydrographs is based on the Soil Conservation Services (SCS) Unit Hydrograph procedures. These procedures are used to quantify the effects of urbanization, to determine peaks flows for large drainage areas, and to design stormwater storage facilities. The SCS Unit Hydrograph Method is used and accepted nationwide.

The presentation of these methods is not intended to preclude the use of other methods. However, the designer shall obtain written approval from the City Engineer before utilizing different methods.

2.02 Master Plan

All drainage design must be coordinated with the City of Belton Comprehensive Master Plan, the City of Belton Strategic Drainage Plan, the most recent Storm Water Management Program (as approved by the Texas Commission on Environmental Quality), and the 2008 Floodway and Flood Boundary Map prepared by the Federal Emergency Management Agency. These planning documents and stormwater guidelines were developed to provide for orderly growth and stormwater protection in Belton; major deviations from these plans will not be allowed.

DRAFT

2.03 Design Storm Frequencies

Storm drainage planning requires the establishment of standards to accomplish design objectives. Storm frequency is a basic criterion necessary in storm drainage design and refers to the magnitude of a storm. Therefore, the selected design frequency establishes the degree of protection desired. Initial storms, as referred to in this manual, designate a storm frequency with a 10-year reoccurrence cycle. Runoff from an initial storm shall be intercepted and conveyed by inlets and an enclosed pipe system. A major storm refers to a rainfall having a 1% probability of reoccurrence every year. Major storms may be partially controlled and conveyed in open drainage systems. Design storm frequencies are as follows:

EXHIBIT 2.1
DESIGN STORM FREQUENCIES

Area or Facility	Frequency
Enclosed Pipe System (3)	5 & 10 years
Channels and Creeks (1) (3)	25 years
Culverts and Small Bridges (1) (3)	25 & 100 years
Large Bridges (1) (2) (3)	50 & 100 years
Floodways Between Building Lines (1) (3)	100 years

1. Channels, creeks, culverts, bridges, and floodways shall have one (1) foot of freeboard.
2. Large bridges are those with a total span greater than 50 feet.
3. All stormwater conveyance systems require consideration of 100-year frequencies and positive overflow provisions.

2.04 Water Spread Limit

Streets function primarily to serve traffic and for that reason must be expected to maintain usability during periods of rainfall. Water spread limits are an effective way of defining the protection required to achieve that usability. The following water spread limits are established:

DRAFT

EXHIBIT 2.2
WATER SPREAD LIMITS

Street Classification	Permissible Water Spread
Major Arterial	25-year storm – 1 traffic lane may be closed each direction
Minor Arterial	25-year storm – 1 traffic lane must remain open each direction
Collector	10-year storm – 1 traffic lane must remain open each direction
Residential Streets	5-year storm – water flow must not exceed top of curb

*One (1) traffic lane = 12 feet

The permissible water spreads are based upon the stated storm frequencies, but consideration must be given to street conveyance of the major storm (100 year) and possible flooding. All streets shall be capable of conveying a major storm without water encroaching into adjacent buildings. Therefore, the maximum spread limits in streets for a major storm shall be the building lines. This requirement of utilizing the streets to convey the major storm runoff may require increasing the capacity of the enclosed drainage system.

2.05 Drainage System Requirements

The complete drainage system is composed of: (1) the initial system, consisting of inlets, storm drains, and the associated appurtenances to convey the initial storm runoff (10 year), and; (2) the major system for the major runoff (100 year), which consists of swales, creeks, channels, floodways and emergency overflows to prevent water encroachment into residential and commercial facilities.

Inlets and storm drains shall be designed in accordance with applicable portions of this section. A closed pipe system shall convey quantities up to and including the flow of a 48-inch pipe. For quantities larger than that carried by a 48-inch pipe, concrete-lined channel(s) or a multi-pipe system(s) shall be utilized. All pipe systems maintained as a public facility shall be constructed with reinforced concrete pipe (RCP), and pipe shall conform to ASTM C76, Class III. However, HDPE pipe will be considered up to 48 inches in diameter in unpaved areas, as approved by the City Engineer.

All channels shall be concrete lined, unless approved by the City Engineer. The reinforced concrete lining shall extend up to at least the water surface elevation of the 10-year frequency channel flow, and additional channel height shall be provided as required to convey the 25-year channel flow with one (1) foot of freeboard. For all open channels, the 100-year flow shall be contained within the building lines; channels shall be expanded as necessary to meet this requirement. Reinforced concrete lined channels shall have a maximum side slope of 2:1 (horizontal to vertical) and unlined channels shall be no steeper than 3:1 for stability and maintenance. All channels shall have a one (1) inch per foot transverse bottom slope to the centerline.

DRAFT

If use is approved, unlined channels will be considered for quantities larger than the equivalent flow of a 72-inch pipe. These channels shall provide one (1) foot of freeboard minimum for a 25-year flow. Additional freeboard shall be considered where wave action is anticipated. Pilot channel of one-foot wide is required for all unlined channels for erosion control and maintenance purposes. For all open channels, the 100-year flow shall be contained within the building lines; channels shall be expanded as necessary to meet this requirement.

All culverts crossing under streets shall extend from property line to property line, plus sufficient length on each end to permit a 3:1 slope to extend from the street property line to a point 6-inches beneath the top of the headwall. All culverts shall be 24-inch minimum diameter, have adequate reinforced concrete headwalls, wingwalls for a 3:1 fill slope, and concrete aprons at each end. For culverts greater than 30", grates are required.

Additional storm drain criteria follows:

1. Minimum velocity with the pipe flowing full shall be 3 feet per second.
2. Within a storm sewer system, the minimum storm drain pipe diameter shall be 15-inches.
3. Pipe diameters shall not decrease downstream.
4. Pipe soffits at size changes should be set at the same elevation.
5. Vertical and horizontal curves in culverts are not permitted. Junction boxes are required at all culvert bends.
6. Inverted crown sections will be permitted only in alleys.
7. Street crowns shall be reduced for approximately 100 feet on each side of valleys and only one valley crossing for each street shall be used at an intersection.
8. Utilization of detention ponds are encouraged once proper location and design are achieved and approved by the City of Belton
9. At streets with culverts or bridges, an emergency overflow shall be provided to contain the 100-year channel flow within the building lines.
10. All conveyance system outfalls shall meet the requirements of the Texas Water Code and City of Belton Subdivision Ordinance.

DRAFT

2.06 Development Responsibilities

Drainage design is an integral part of any new development. Proper planning and coordination of the drainage scheme, along with the development plans, is required to achieve a proper and adequate storm drainage system. Lack of drainage consideration during the initial planning phase will lead to numerous complaints due to flooding and to added cost due to extension of the drainage system into areas not properly considered. Existing sites, new development and redevelopment areas shall require appropriate detention and/or mitigation measures to be designed and constructed as determined by the following guidelines and shall meet the requirements of the Texas Water Code:

1. Any proposed project that would cause damage to downstream properties or improvements or that would cause unsafe conditions for the general public due to an increase in stormwater runoff as determined by the City Engineer;

2. Any receiving stream, drainage system or roadway system that is deemed inadequate to accommodate the increase in runoff or the redirection of runoff from a proposed project.

3. Any existing facilities that would be damaged or would otherwise cause the unsafe conveyance of stormwater by a proposed project.

2.07 Design Parameters

Hydrology

The primary consideration in any drainage study must begin with determination of rainfall in terms of intensity, duration and frequency. The data to be used for calculating the amount of rainfall and the determination of runoff shall be that found in the Hydraulic Manual prepared and compiled by the Texas Department of Transportation – Bridge Division.

The Rational Method will be used due to its general simplicity and acceptance. The Rational Method is based on the principal that if rain persists at a uniform rate, the runoff will equal the rate of rainfall. This solution method is applicable to small areas and shall not be applied to areas exceeding 200 acres.

The Exhibits 2.3, 2.4 and 2.5 show the adopted values for minimum times of concentration, runoff coefficients for C, and percentage of impervious area to be used in the City of Belton.

EXHIBIT 2.3
MINIMUM TIMES OF CONCENTRATION

Areas	Minimum Time (Minutes)
Parks & Open Areas	20
Residential	15
Commercial	10
Roofs & Paved Areas	10

DRAFT

EXHIBIT 2.4

VALUES OF RUNOFF COEFFICIENT "C"

All adopted runoff coefficients are subject to calculation of actual impervious areas experienced in any given drainage basin and are subject to review and modification by the City Engineer.

Land Use	Range of C	Adopted Value of C
Residential:		
Single Family (Lots < 1.0 Acre)	0.30 – 0.65	0.50
Single Family (Lots > 1.0 Acre)	0.25 – 0.50	0.40
Multi-family Detached (4 Units)	0.40 – 0.60	0.60
Multi-family Attached	0.60 – 0.75	0.70
Commercial:		
Industrial	0.50 – 0.90	0.70
Business	0.60 – 0.90	0.80
Business (downtown)	0.70 – 0.95	0.90
Parks & Cemeteries:	0.10 – 0.25	0.20
Playgrounds:	0.20 – 0.35	0.30
Railroad Yard Areas:	0.20 – 0.35	0.30

Character of Surface		
Pavements:	0.70 – 0.95	0.90
Roofs:	0.75 – 0.95	0.90
Impervious Soils (heavy)	0.40 – 0.65	0.65
Impervious Soils with Turf	0.30 – 0.55	0.50
Slightly Pervious Soils	0.15 – 0.40	0.40
Slightly Pervious Soils with Turf	0.10 – 0.30	0.30
Moderately Pervious Soils	0.05 – 0.20	0.20
Moderately Pervious Soils with Turf	0.05 – 0.10	0.10

DRAFT

EXHIBIT 2.5
PERCENTAGE OF IMPERVIOUS AREA

Description	Plot Size (sq ft)	Average Impervious Area (Percentage)
Residential Estate	>43,560	9
Residential Dwelling	43,560	17
Residential Dwelling	21,780	38
Residential Dwelling	16,000	43
Residential Dwelling	10,000	46
Residential Dwelling	7,500	46
Residential Dwelling	<5,000	50
Multiple-Family Dwelling	Variable	72
Schools	Variable	35
Churches	Variable	85
Commercial District	Variable	85
Shopping Center District	Variable	100
Industrial District	Variable	72
Freeway	Variable	100
Open Land (1)		1

(1) Open land in rural areas and public parks increased to 1.0 percent to account for roads, drives and scattered buildings.

DRAFT

2.08 Detention

Detention shall be required to provide temporary storage of stormwater runoff to control discharge rates and to provide gravity settling of potential pollutants. The City Engineer will determine in which instances detention is required. The adopted detention calculation methods shall be those known as the modified Rational Method or the Soil Conservation Service (SCS) Method or other methods approved for use by the City Engineer. Approved method(s) shall be obtained prior to design.

2.09 Hydraulics

Stormwater is conveyed usually on the upper end of a drainage basin by inlets and storm sewers (closed conduit systems) to channel and through culverts and bridges. All calculations and design procedures for this hydraulic work shall follow the Hydraulic Manual prepared and compiled by the Texas Department of Transportation – Bridge Division.

Exhibits 2.6, 2.7, 2.8 and 2.9 show adopted Manning's Coefficients, minimum pipe slopes, maximum channel velocities and roughness coefficients.

EXHIBIT 2.6
MANNING'S COEFFICIENT OF ROUGHNESS
FOR PIPE

Material	Value of n	Adopted
Asbestos-Cement Pipe	0.011 – 0.015	0.013
Cast Iron Pipe Coated	0.010 – 0.014	0.012
Cast Iron Pipe Uncoated	0.011 – 0.016	0.013
Concrete Monolithic Conduit	0.012 – 0.017	0.015
Concrete Pipe	0.011 – 0.015	0.013
Corrugated Metal Pipe	0.022 – 0.026	0.024
(1/2" x 2-2/3")		
25% Paved	0.021 – 0.023	0.022
Fully Paved	0.012 – 0.015	0.013
Plastic Pipe (Smooth)	0.011 – 0.015	0.013
Vitrified Clay Pipe	0.011 – 0.015	0.013

EXHIBIT 2.7
MINIMUM PIPE SLOPES

Pipe Diameter	Slope in Feet Per Foot	
	n= 0.013	n= 0.024
12"	0.00435	0.01490
15"	0.00324	0.01110
18"	0.00254	0.00868
21"	0.00208	0.00709
24"	0.00174	0.00592
27"	0.00148	0.00510
30"	0.00129	0.00439
33"	0.00113	0.00386
36"	0.00101	0.00345
42"	0.00082	0.00280
48"	0.00069	0.00235
54"	0.00059	0.00201
60"	0.00051	0.00175
66"	0.00045	0.00154
72"	0.00040	0.00137

DRAFT

EXHIBIT 2.8
ADOPTED MAXIMUM CHANNEL VELOCITIES

Channel Material	Maximum Channel Velocity, fps
Fine Sand	2.0
Coarse Sand	4.0
Fine Gravel	6.0
Earth	
Sandy Silt	2.0
Silt Clay	3.5
Clay	6.0
Grass Lined Earth	
Bermuda Grass – Sandy Silt	6.0
– Silt Clay	8.0
Poor Rock (usually sedimentary)	10.0
Soft Sandstone	8.0
Soft Shale	3.5
Reinforced Concrete Lining	15.0

DRAFT

EXHIBIT 2.9
ADOPTED MAXIMUM STORM SEWER PIPE VELOCITIES

The maximum velocity of storm sewer piping shall be 15 feet per second for all collection trunk lines and selected lateral lines as determined by the City Engineer. Manning's Equation shall be used as the test standard for said velocity determinations with no entrance or exit head losses to be considered. Only pipe friction losses will be used as per Manning's Equation to wit:

$$V = \frac{1.486}{N} (R)^{2/3} (S)^{1/2}$$

EXHIBIT 2.10
MANNING'S COEFFICIENT OF ROUGHNESS FOR CHANNELS

		N Values*		Adopted
		Min.	Max	'N' Values
Lined Channels				
	Metal corrugated	0.021	0.024	0.023
	Concrete	0.012	0.030	0.025
	Cement rubble	0.017	0.030	0.025
	Concrete gutter	0.015	0.020	0.016
	Rock Rip-rap	0.030	0.045	0.035
Unlined Channels				
	Poor grass growth	0.025	0.035	0.030
	Average grass growth	0.035	0.045	0.040
	Dense grass growth	0.040	0.050	0.045
	Stony beds, weeds on bank	0.025	0.040	0.035
	Rock cuts, smooth & uniform	0.025	0.035	0.030
	Rock cuts, rugged & irregular	0.035	0.045	0.040
Natural Stream Channels				
	Some grass & weeds; little or no brush	0.030	0.035	0.035
	Dense growth of weeds, depth of flow materially greater than weed height	0.035	0.050	0.045
	Some weeds, light brush on banks	0.035	0.050	0.045
	Some weeds, heavy brush on banks	0.050	0.070	0.060
	For trees within channels with branches submerged at high stage, increase all values above by	0.010	0.020	0.015
Pasture, no brush				
	Short grass	0.030	0.035	0.030
	Tall grass	0.035	0.050	0.040
Cultivated areas				
	No crop	0.030	0.040	0.035
	Mature right-of-way crops	0.035	0.045	0.040
	Mature field crops	0.040	0.050	0.045
	Heavy weeds, scattered brush	0.050	0.070	0.060
	Wooded	0.120	0.160	0.140

**Maximum and minimum "n" values adapted from the Texas Department of Transportation.*

DRAFT

2.10 Construction Drawings

All construction drawings for stormwater conveyance systems such as pipe systems, channels, culverts, bridges, open channels, etc. shall show the plan view, profile view and typical cross sections of sufficient intervals as approved by the City Engineer. The plan, profile and cross sections for the drainage conveyance systems shall be labeled with percent slopes, horizontal and vertical dimensions, inlet and outlet elevations, mean sea level elevations, 100-year water surface elevations, carrying capacity required with carrying capacity provided and the hydraulic gradeline shown. All concrete used for stormwater conveyance systems shall be Class A with a 28-day compressive strength design of 3,000 psi.

Construction plans shall include results of calculations for storm runoff, inlet design, and storm sewer design as shown in Tables A-1 through A-4 in this section. If detention ponds are included, calculations shall include pre-project, post project and post project with detention hydrologic output for the 2, 10, 25 and 100-year storm events, rating tables for the outfall structure, and a stage-storage-discharge table.

2.11 Stormwater Control

Erosion Control

1. Temporary Control

Temporary controls shall be used during construction to prevent the erosion of soil and sedimentation of waterways until restoration is complete. Temporary controls shall be in accordance with the Texas Commission on Environmental Quality (TCEQ) and the latest version of the City of Belton Stormwater Management Plan.

Primary erosion control strategies are to divert runoff away from unstable areas or to provide a stable surface that will resist the effects of rain and runoff. The principle measures for diverting runoff during construction include perimeter swales and dikes, and slope drains. Where temporary vegetation is planted to prevent erosion, blankets, matting and mulches can help stabilize the area until the vegetation is adequately established. Exhibit 2.11 identifies various erosion control measures.

DRAFT

EXHIBIT 2.11
TEMPORARY EROSION CONTROL BMPS

Erosion Control	Area	Application	Notes
Interceptor Swale	< 5 acres	Used as a perimeter control or to shorten slope distances	
Diversion Dike	< 10 acres	Used to route runoff away from disturbed areas	
Pipe Slope Drain	< 5 acres	Transport runoff down steep, erodible slopes	
Channel Stabilization	Along Channels	Conveyance of concentrated runoff	
Outlet Stabilization	At Outlets	Prevent erosion at outlet of channel or conduit	
Level Spreader	Based on flow	Outlet device for dikes and diversions	Slope < 10% and stable
Subsurface Drain	Sized as required	Prevent soils from becoming saturated and prevent seeps	
Vegetation	Up to Mild Slopes	Temporary and permanent stabilization of disturbed areas	Permanent vegetation required for all disturbed areas
Blankets/Matting w/vegetation	Steep Slopes	Used in channels and on steep slopes	Suggested max. slope 2H:1V for slope applications
Brush Mulch/Erosion Control Logs	NA	Temp. stabilization of disturbed areas stabilization in channels, around inlets, on steep slopes	Suggested max. slope 2H:1V for slope applications
Hydraulic Mulch	Small Channel	Stabilization of newly seeded areas	Suggested max. slope 3H:1V
Sod	Up to Mild Slopes	Immediate stabilization in channels, around inlets, or for aesthetics	
Dust Control	As Required	Areas subject to on- or off-side impacts from surface/air movement of dust	

DRAFT

2. Permanent Control

All areas within public right-of-ways that have been stripped or filled as a result of construction activities shall be restored to previous condition. Such areas shall be covered with a minimum of four (4) inches of topsoil prior to the application of grass seed. Grass seed shall be applied in accordance with Exhibit 2.12.

EXHIBIT 2.12
RESEEDING STANDARDS

Time Of Year	Seed Type	Amount of Seed per 1,000 SF
October – February	Unhulled Bermuda or Winter Rye	2 lbs
March – September	Hulled Bermuda	2 lbs

Seedlings shall be watered until uniform growth is established. During the first two (2) months after application of the seed, the planted area shall be irrigated or sprinkled at seven (7) day intervals in a manner that will not erode the topsoil but at a rate sufficient to thoroughly soak the soil to a minimum depth of four (4) inches. Rainfall occurrences of one-half ($^1/_2$) inch or greater shall postpone the watering schedule by one (1) week intervals.

Restoration shall be considered to be acceptable when the grass has grown to a height of at least twelve (12) inches, has had its first mow, and covers 95% percent of the area with bare spots no greater than twenty-five (25) square feet.

Conservation Areas – All streets, utilities, drainage improvements, and buildings shall be constructed and located so as to protect conservation areas.

Landscape Requirements – Refer to the City of Belton Design Guidelines for Landscape Requirements.

Construction Entrance/Exit – Construct an 8” washed coarse aggregate surface for temporary construction entrances and exits according to the City of Belton Standard Details.

Tree Preservation – Tree preservation shall be in accordance with the Erosion/Sedimentation and Tree Protection Notes and Details included herein.

DRAFT

2.12 Materials Requirements for Drainage Improvements

A. Domestic Products

All iron, steel and manufactured components/materials used in any infrastructure project within the City of Belton or the City of Belton ETJ shall be manufactured in the United States of America. Proof of the manufacturer location shall be provided to the City Engineer prior to installation of components/materials. The City Engineer may waive this requirement when said City Engineer deems the waiver is in the best interest of the City of Belton.

B. Concrete and Reinforcement Items

All concrete shall have a minimum 28-day compressive strength of 3,000 psi unless otherwise noted on the plans, specifications or other written document. Water shall not be added to the concrete after inspection and testing. Placed concrete shall be vibrated when necessary depending on slump, space available for concrete placement and depth of placement. The slump of concrete shall be placed at slumps per the Texas Department of Transportation Specifications for the Construction of Highways, Streets and Bridges under Item 420 with respect to the type of concrete structure being constructed.

Steel reinforcement shall be billeted conforming to ASTM specifications A615 Grade 60 or the latest revision to the ASTM A615 specification. Steel cover from the outside edge of steel to inside face of concrete. Reinforcement shall be adequately supported, spaced and secured before placing the concrete. The reinforcement support system (metal support chairs) shall be as described in the details of the Transportation Section. Reinforcing steel shall be placed in accordance with ACI Standards with overlaps of 40 bar diameters. Rebar chairs shall be placed on 48 inch maximum spacing each way.

DRAFT

COMPUTATION SHEET A-1

RATIONAL METHOD SUB-AREA RUNOFF CALCULATIONS

Project: _____

Design Storm: _____

DESIGN POINT	DRAINAGE AREA		CA' VALUES FOR INDIVIDUAL SUB-AREAS									WEIGHTED 'CA' VALUE	TIME OF CONCENTRATION COMPUTATION							RAINFALL INTENSITY I	PEAK FLOW Q
													OVERLAND FLOW TIME			GUTTER FLOW TIME			TOTAL TIME T_C		
	AREA NO.	TOTAL ACRES	$(CA)_1$	$(CA)_2$	$(CA)_3$	$(CA)_4$	$(CA)_5$	$(CA)_6$	$(CA)_7$	$(CA)_8$	$(CA)_9$		L_o	S_o	t_o	L_g	S_g	t_g			
1	2	3	4	5	6	7	8	9	10	11	12	13	14	15	16	17	18	19	20	21	22

$(CA)_1$: C =

$(CA)_2$: C =

$(CA)_3$: C =

$(CA)_4$: C =

$(CA)_5$: C =

$(CA)_6$: C =

$(CA)_7$: C =

$(CA)_8$: C =

$(CA)_9$: C =

Computation Sheet A-1

DRAFT

COMPUTATION SHEET A-2

CURB INLETS AND DROP INLETS IN SUMPS

INLET NO.	FLOW TO INLET Q (cfs)	LENGTH OF INLET OPENING L (ft)	AREA OF INLET OPENING A (sq ft)	DISCHARGE PER UNIT FOOT OF OPENING q = Q/L (cfs/ft)	COMPUTED HEAT AT INLET		MAXIMUM ALLOWABLE HEAD H (ft)	WATER SPREAD LIMITS S_p (ft)	NOTES
					WEIR FLOW $H = (q/3)^{2/3}$ (ft)	ORIFICE FLOW $H = [(Q/A)/4.82]^2$ (ft)			
1	2	3	4	5	6	7	8	9	10

DRAFT

COMPUTATION SHEET A-3

CURB INLETS ON GRADE

INLET		DRAINAGE AREA NO.	SUB-AREA PEAK FLOW QP (cfs)	CARRY-OVER FROM UPSTRM INLET q (cfs)	TOTAL FLOW Q (cfs)	STRAIGHT CROWN SLOPES					PARABOLIC STREET SLOPES				CAPACITY PER FOOT OF INLET Q/L_o (cfs/ft)	LENGTH OF INLET REQ'D FOR Q_o (ft)	INLET LENGTH L (ft)	L/L_o	Q/Q_o	FLOW INTRCPTD $Q=Q_o x Q/Q_o$ (cfs)	CARRY-OVER FLOW q (cfs)	COMMENTS
TYPE & NO.	STATION					CROWN SLOPE Z	Z/N	STREET SLOPE S_o (ft/ft)	FLOW DEPTH Y_o (ft)	WIDTH OF SPREAD S_p (ft)	TYPE OF STREET SECTION	STREET SLOPE S_o (ft/ft)	FLOW DEPTH Y_o (ft)	WIDTH OF SPREAD S_p (ft)								
1	2	3	4	5	6	7	8	9	10	11	12	13	14	15	16	17	18	19	20	21	22	23

DRAFT

COMPUTATION
SHEET A-3

Column 1	Design Point; this point is the first junction point upstream. "Junction Point" refers to any inlet, manhole, bend, etc. that occurs which would cause a minor head loss.
Column 2	Junction point immediately downstream of design point.
Column 3	Distance between the design point in Column 1 and the design point in Column 2.
Column 4	Incremental drainage sub-area designation.
Column 5	Incremental drainage sub-area size contributing to the design point in Column 1.
Column 6	Total drainage sub-area size contributing to the design point in Column 1.
Column 7	Weighted runoff coefficient for incremental drainage sub-area.
Column 8	Column 5 times Column 7.
Column 9	Total "CA" for all drainage sub-areas contributing to the design point in Column 7.
Column 10	Time of concentration to the design point in Column 1.
Column 11	Flow time in storm drain system from the design point in Column 1 to the design point in Column 2; Column 3 divided by Column 21 of previous row.
Column 12	Column 10 + Column 11.
Column 13	Design frequency of storm drain system.
Column 14	Rainfall intensity determined from the value calculated in Column 12 and the intensity curve for Bell County.
Column 15	Design discharge; Column 9 times Column 14.
Column 16	Size of pipe chosen to carry an amount equal to or greater than the design discharge (Figures A-6 and A-7 can be used to determine this)
Column 17	Slope of frictional gradient Sf (can be determined from Manning's Equation).
Column 18	Elevation of hydraulic gradient at upstream end of pipe = elevation of downstream end + column 17 times Column 3.
Column 19	Elevation of hydraulic gradient at downstream end of pipe.
Column 20	Velocity of flow in incoming pipe at design point (use Q=AV for full flow and Figures A-8 and A-9 for partial flow).
Column 21	Velocity of flow in outgoing pipe at design point.
Column 22	Velocity head loss for outgoing pipe at design point.

DRAFT

Column 23 Velocity head loss for incoming pipe at design point.

Column 24 Head loss coefficients at junction (see Figures A-10 and A-11).

Column 25 Column 23 times Column 24.

Column 26 Column 22 - Column 25 (note for bends and inlets or manholes at the beginning of a line V1 = V2 and the appropriate Kj value should be used in Column 25; Column 25 = Column 26.

Column 27 Column 18 + Column 26.

Column 28 Invert elevation at design point for incoming pipe.

Column 29 Invert elevation at design point for outgoing pipe.

DRAFT

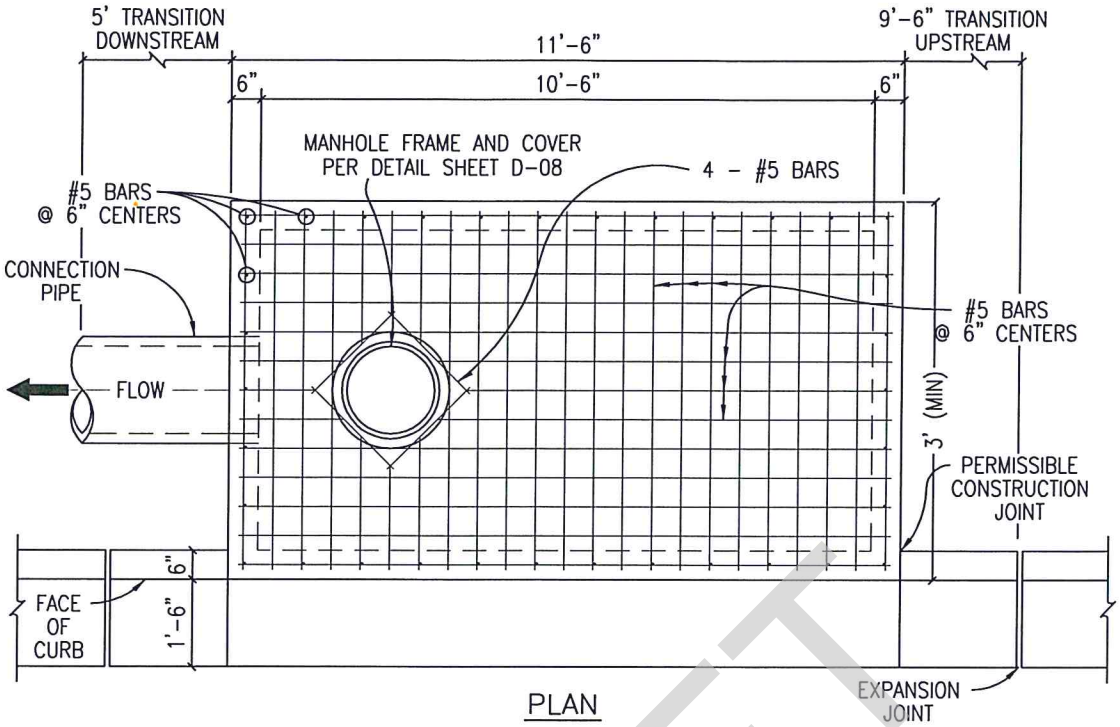

PLAN

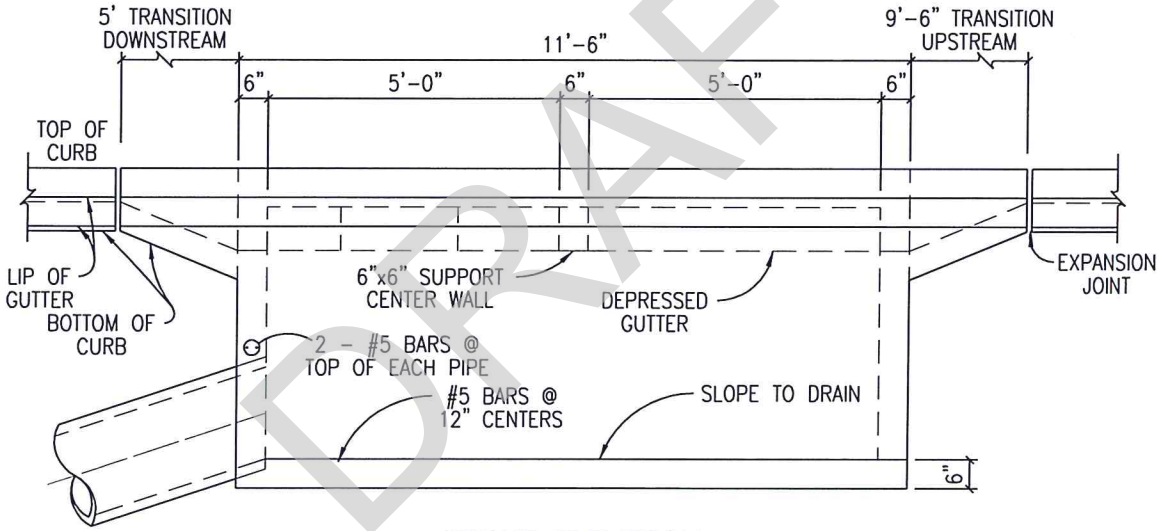

FRONT ELEVATION

DRAFT

NOTES:

1. ALL CONCRETE SHALL BE CLASS "A" 3,000 PSI CONCRETE.
2. SHOULD THE CURB INLET BE LOCATED IN A SAG, CONTRACTOR SHALL TRANSITION 9'-6" ON BOTH SIDES OF CURB INLET.
3. THE MAXIMUM LENGTH OF CURB INLET, WITH EXTENSIONS, SHALL BE 20'.
4. EXTENSIONS OF 5' OF OPEN CURB SHALL BE ACCOMPANIED BY 6" WIDE POST SUPPORTS. UNSUPPORTED LENGTH SHALL NOT EXCEED 5'.
5. RECESSED INLETS SHALL BE USED UNLESS R.O.W. REQUIREMENTS/UTILITY CONFLICTS MAKE THEIR USE IMPRACTICAL.

CITY OF BELTON, TEXAS

DEPARTMENT OF PUBLIC WORKS

CURB INLET

CONSTRUCTION STANDARDS AND DETAILS

D-01
SCALE: N.T.S.
ISSUE DATE: XXXX

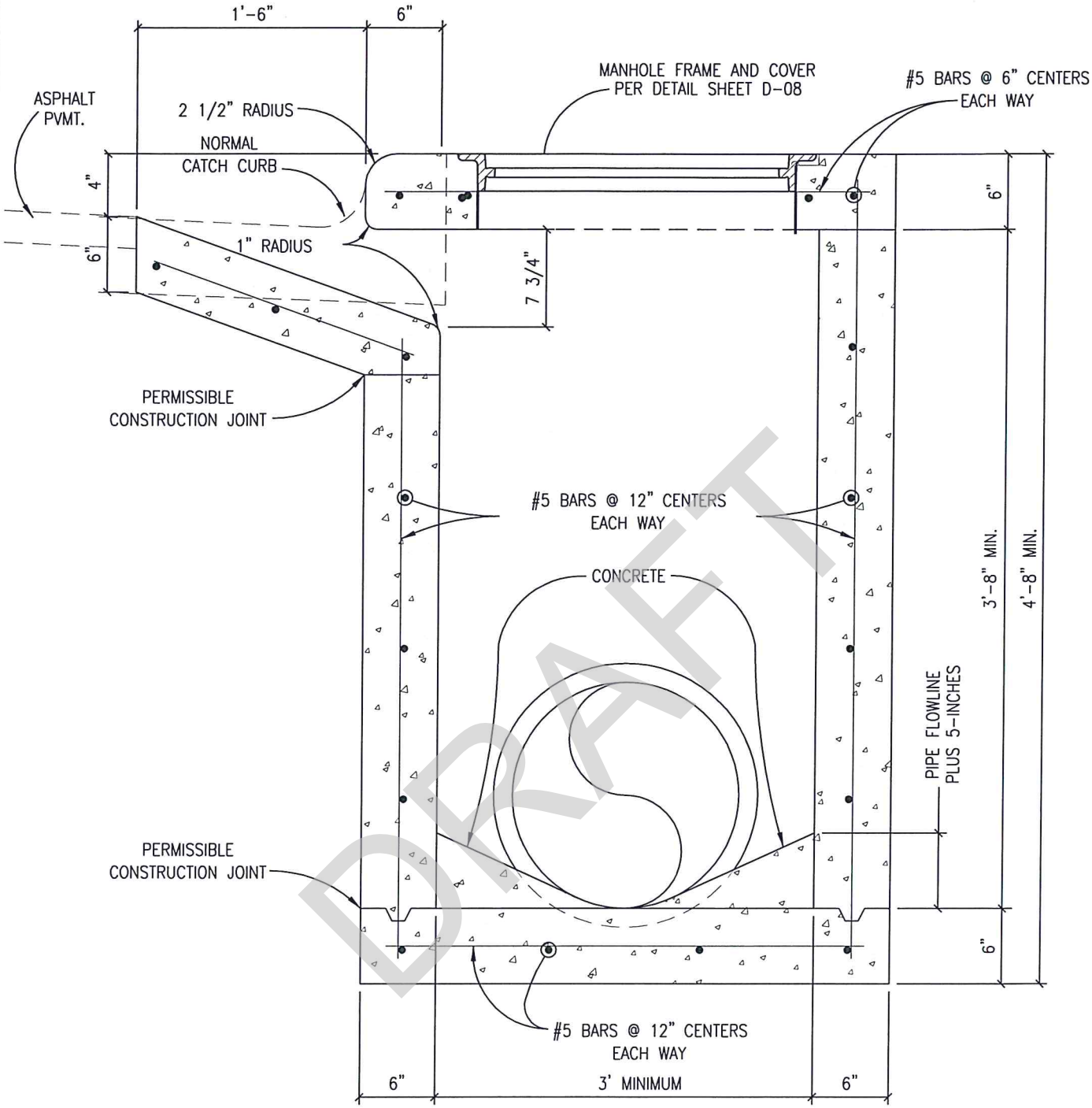

DRAFT

NOTES:

1. ALL CONCRETE SHALL BE CLASS "A" 3,000 PSI CONCRETE.
2. STORM SEWER PIPE MATERIAL TO BE R.C.P. (CLASS III) UNLESS OTHERWISE SPECIFIED BY THE CITY OF BELTON.
3. RECESSED INLETS SHALL BE USED UNLESS R.O.W. REQUIREMENTS/UTILITY CONFLICTS MAKE THEIR USE IMPRACTICAL.

CITY OF BELTON, TEXAS

DEPARTMENT OF PUBLIC WORKS

CURB DRAIN INLET TYPICAL SECTION

CONSTRUCTION STANDARDS AND DETAILS

D-02

SCALE: N.T.S.

ISSUE DATE: XXXX

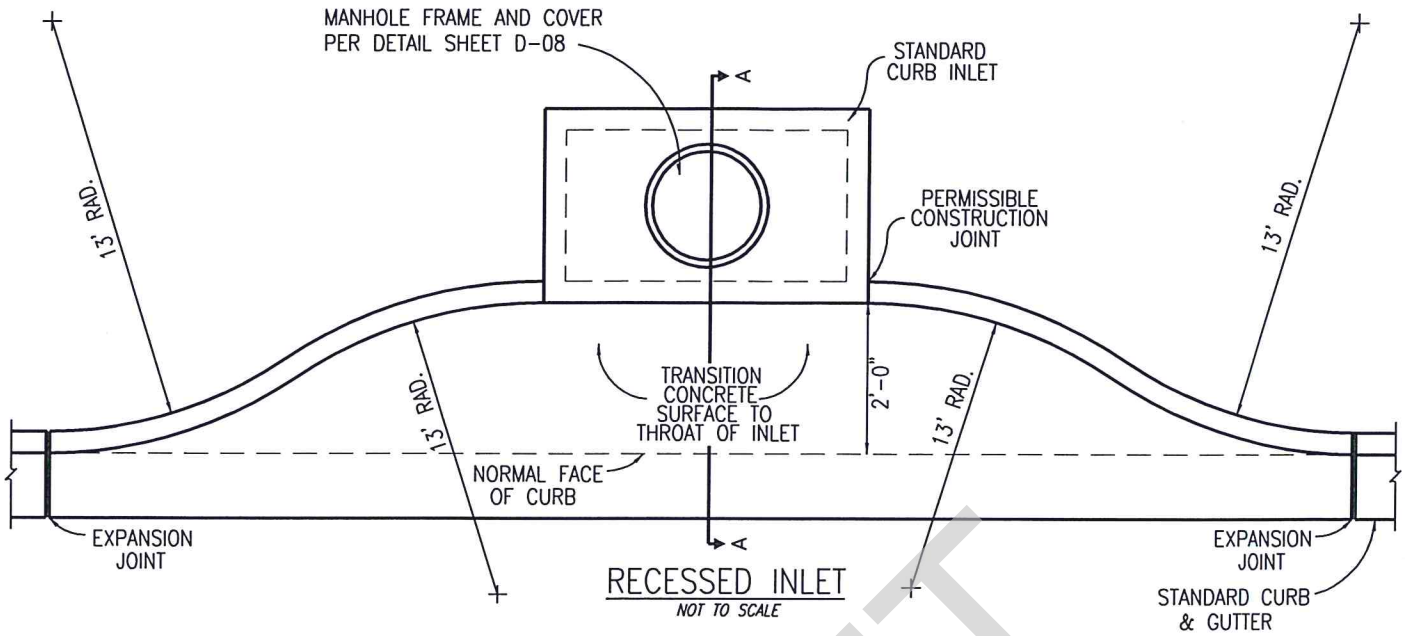

RECESSED INLET

NOT TO SCALE

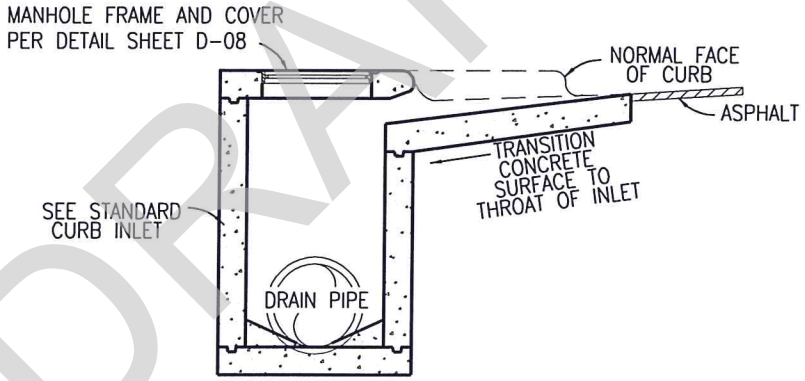

SECTION A-A

NOT TO SCALE

DRAFT

NOTES:

1. ALL CONCRETE SHALL BE CLASS "A" 3,000 PSI CONCRETE.
2. STORM SEWER PIPE MATERIAL TO BE R.C.P. (CLASS III) UNLESS OTHERWISE SPECIFIED BY THE CITY OF BELTON.
3. RECESSED INLETS SHALL BE USED UNLESS R.O.W. REQUIREMENTS/UTILITY CONFLICTS MAKE THEIR USE IMPRACTICAL.

CITY OF BELTON, TEXAS

DEPARTMENT OF PUBLIC WORKS

RECESSED INLET

CONSTRUCTION STANDARDS AND DETAILS

D-03

SCALE: N.T.S.

ISSUE DATE: XXX

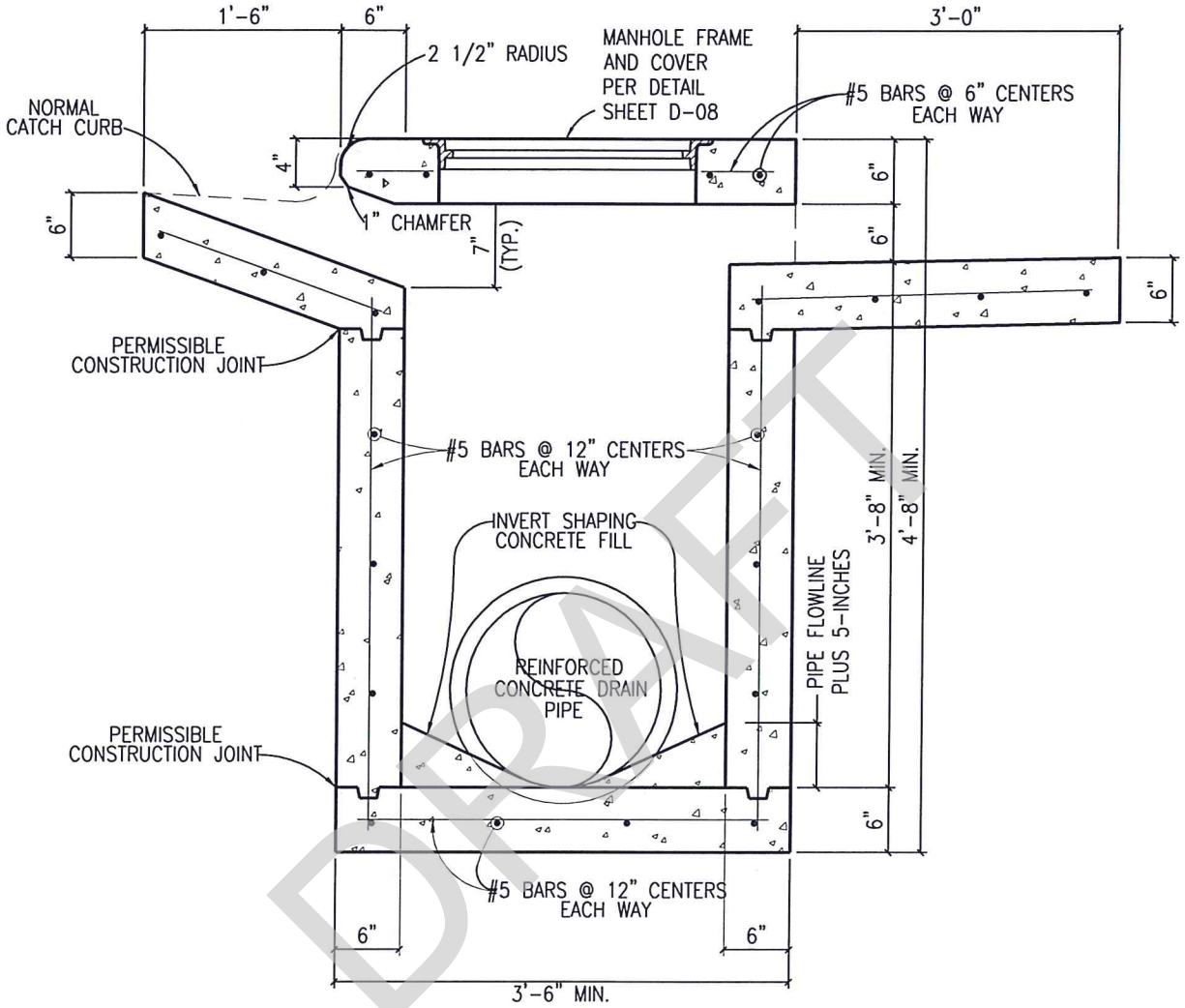

SIDE SECTION

DRAFT

NOTES:

1. ALL CONCRETE SHALL BE CLASS "A" CONCRETE.
2. STORM SEWER PIPE MATERIAL TO BE REINFORCED CONCRETE PIPE CLASS III.
3. MANHOLE COVER SHALL HAVE "NO DUMPING" STAMP PER SHEET D-08.
4. MANHOLE COVER SHALL BE PER DETAIL ON D-08.

CITY OF BELTON, TEXAS

DEPARTMENT OF PUBLIC WORKS

TWO-SIDED DRAIN INLET

CONSTRUCTION STANDARDS AND DETAILS

D-04

SCALE: N.T.S.

ISSUE DATE: XXX

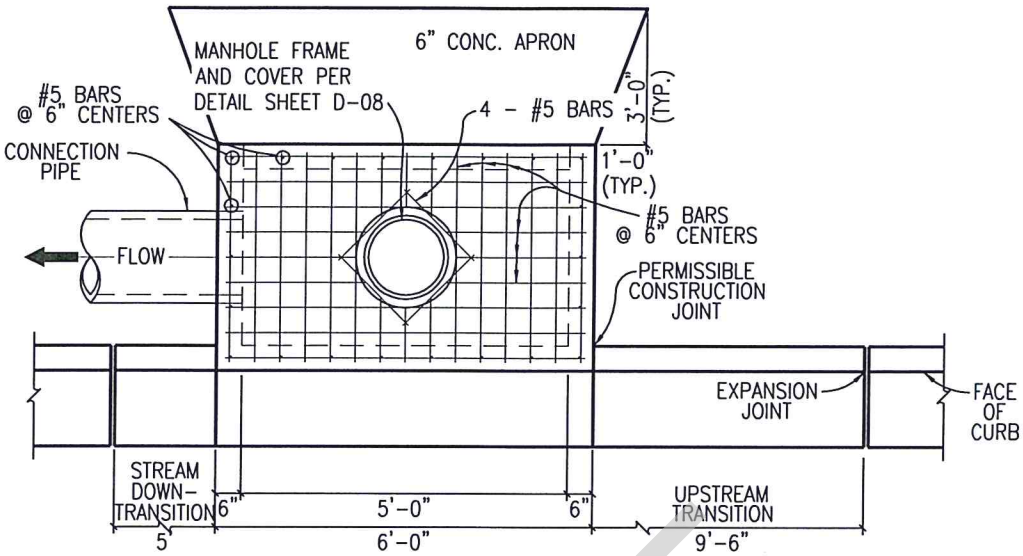

PLAN

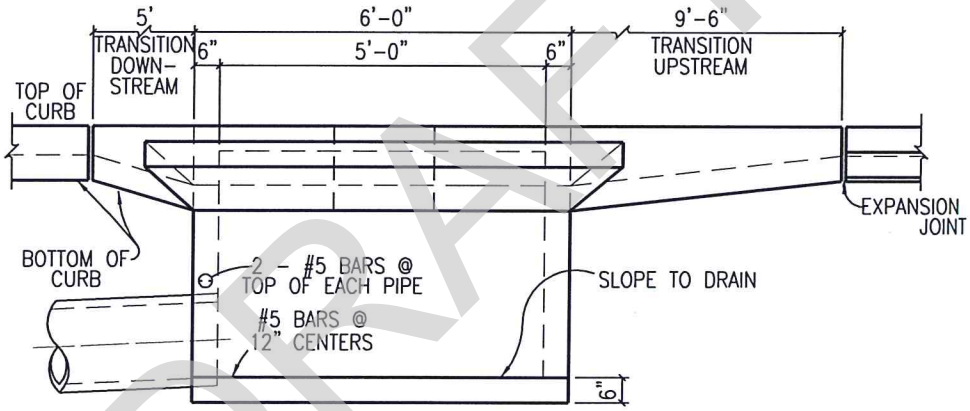

BACK SIDE ELEVATION

TWO-SIDED DRAIN INLET

NOT TO SCALE

DRAFT

NOTES:

1. SHOULD THE CURB INLET BE LOCATED IN A SAG, CONTRACTOR SHALL TRANSITION 9'-6" ON BOTH SIDES OF CURB INLET.
2. THE MAXIMUM LENGTH OF CURB INLET, WITH EXTENSIONS, SHALL BE 20'.
3. EXTENSIONS OF 5' OF OPEN CURB SHALL BE ACCOMPANIED BY 6" WIDE POST SUPPORTS.
3. MANHOLE COVER SHALL HAVE "NO DUMPING" STAMP PER SHEET D-08.
4. MANHOLE COVER SHALL BE PER DETAIL ON D-08.

CITY OF BELTON, TEXAS

DEPARTMENT OF PUBLIC WORKS

TWO-SIDED DRAIN INLET

CONSTRUCTION STANDARDS AND DETAILS

D-05

SCALE: N.T.S.

ISSUE DATE: XXX

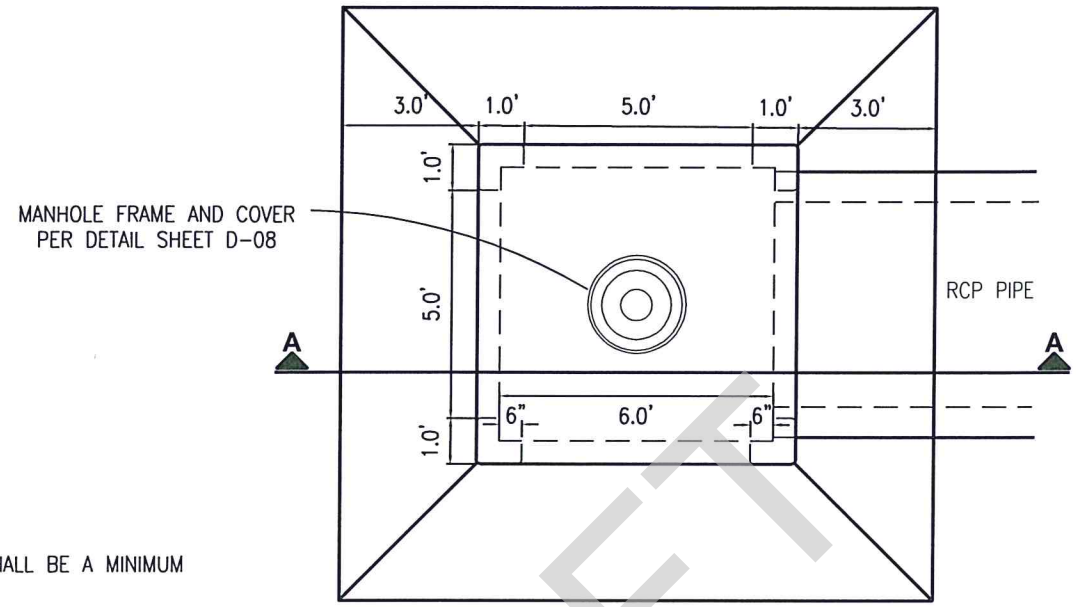

PLAN

NOT TO SCALE

NOTES:

1. ALL CONCRETE SHALL BE A MINIMUM OF 3000 P.S.I.
2. CONCRETE FOR ALL ITEMS ON THIS SHEET SHALL BE CLASS "A", 5 SACK, 3000 P.S.I. CONCRETE AT 28 DAYS UNLESS OTHERWISE SPECIFIED ON THE PLANS OR SPECIFICATIONS. ALL CONCRETE SHALL BE GIVEN A BROOM FINISH UNLESS OTHERWISE SPECIFIED. ALL REINFORCING SHALL HAVE 2" MINIMUM COVER, 3" MINIMUM IF PLACED AGAINST EARTH FORM.
3. ALL EXPOSED CORNERS TO BE TOOLED TO A 1/4" RADIUS.

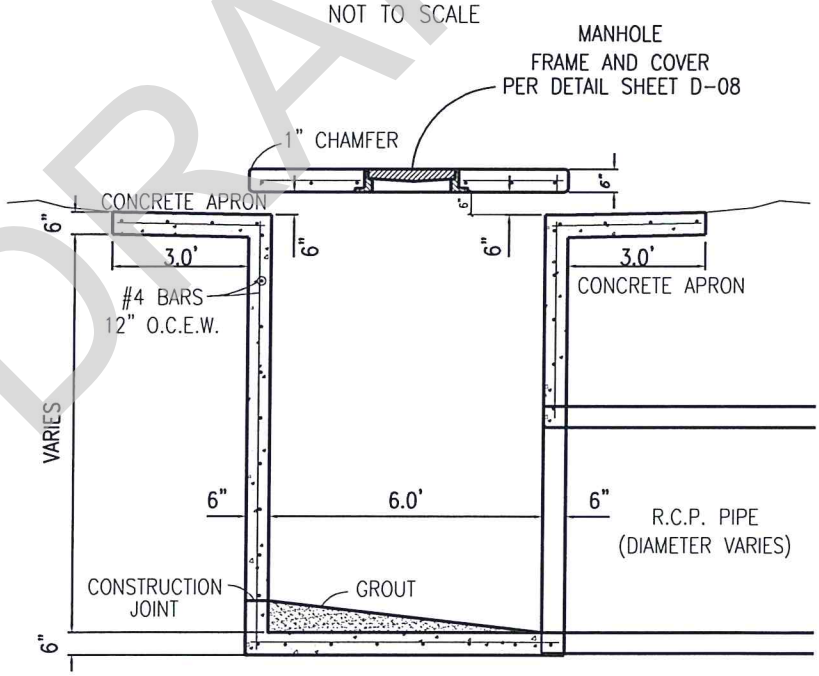

SECTION A-A

NOT TO SCALE

DRAFT

CITY OF BELTON, TEXAS

DEPARTMENT OF PUBLIC WORKS

AREA INLET

CONSTRUCTION STANDARDS AND DETAILS

D-06

SCALE: N.T.S.

ISSUE DATE: XXX

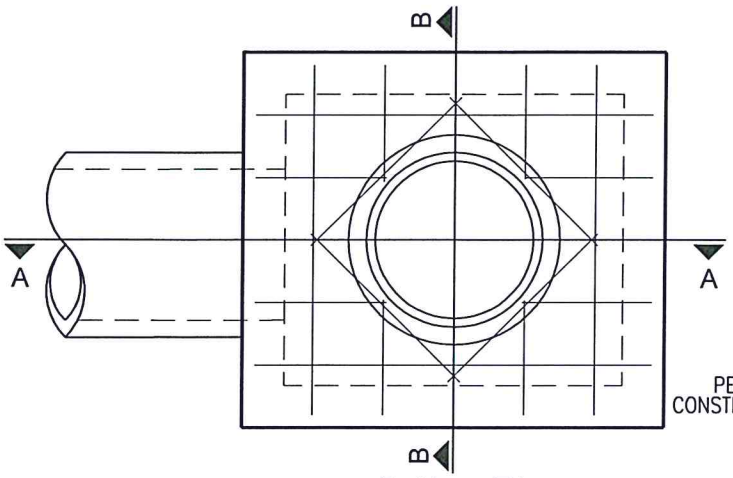

PLAN VIEW

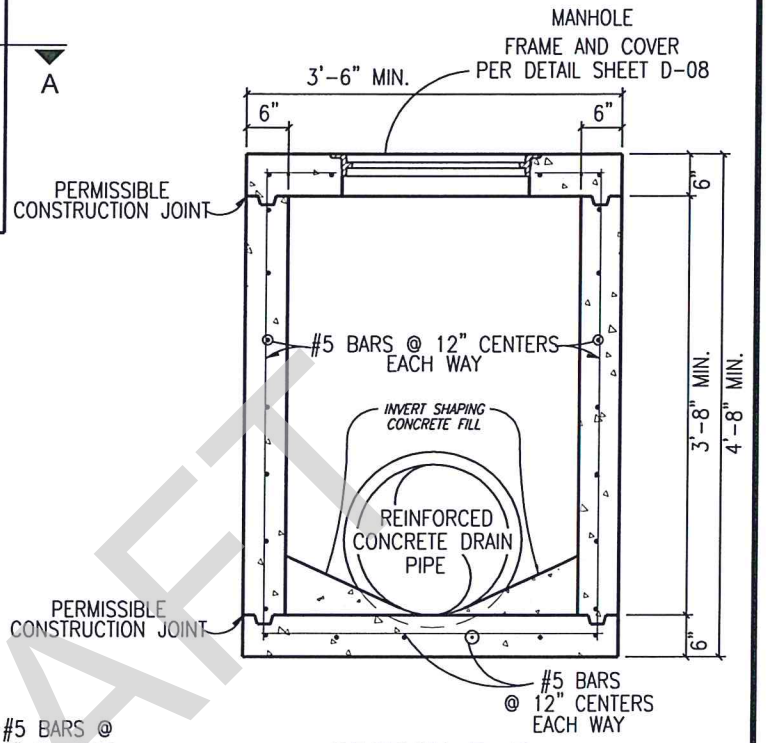

SECTION B-B

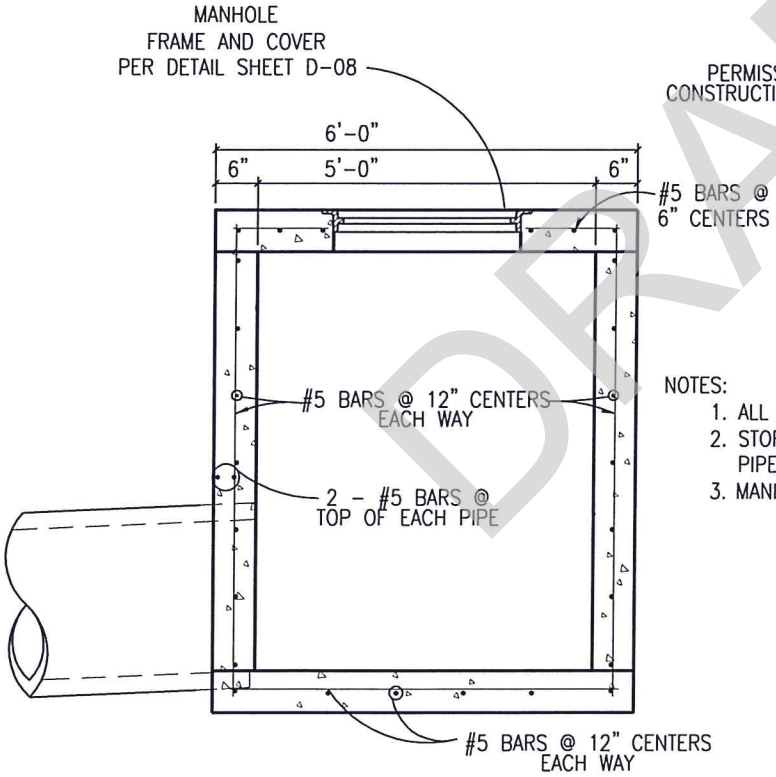

SECTION A-A

NOTES:

1. ALL CONCRETE SHALL BE CLASS "A" CONCRETE.
2. STORM SEWER PIPE MATERIAL TO BE REINFORCED CONCRETE PIPE CLASS III.
3. MANHOLE SHALL BE PER DETAIL SHEET D-08.

DRAFT

CITY OF BELTON, TEXAS

DEPARTMENT OF PUBLIC WORKS

JUNCTION BOX

CONSTRUCTION STANDARDS AND DETAILS

D-07

SCALE: N.T.S.

ISSUE DATE: XXX

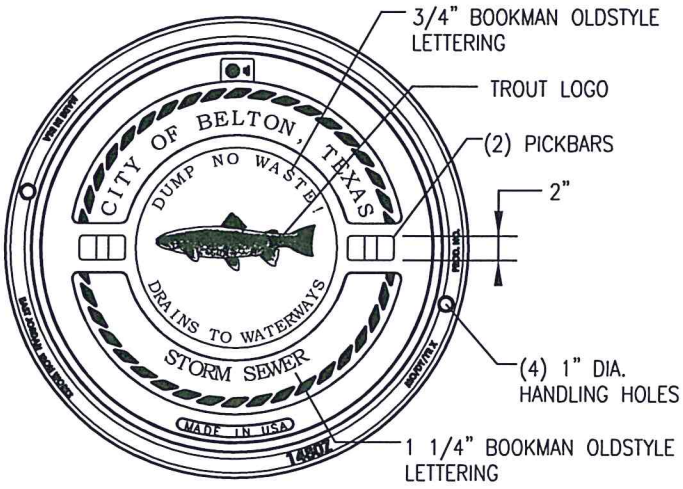

PLAN VIEW

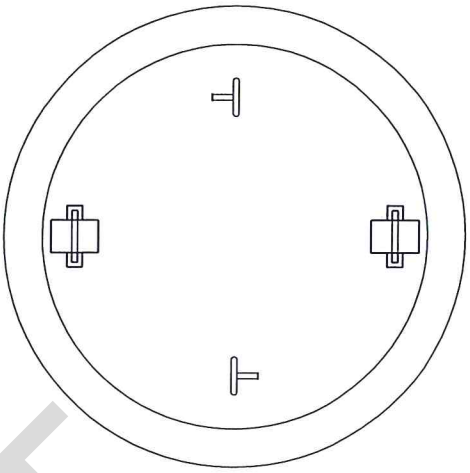

BOTTOM VIEW

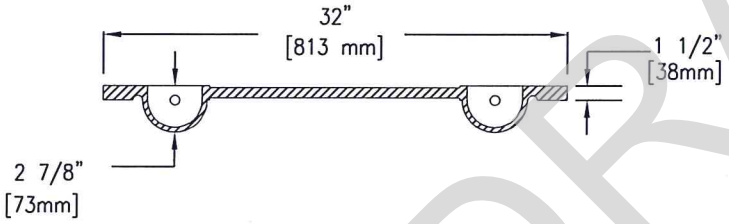

CROSS SECTION

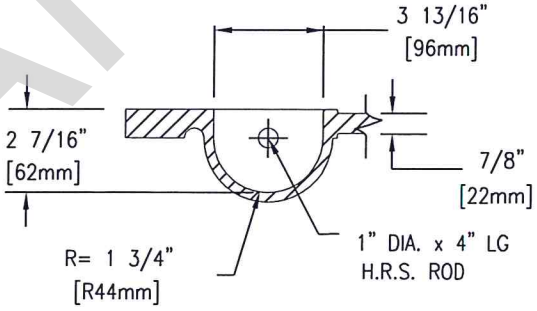

PICKBAR DETAIL

DRAFT

V1432 LOGO COVER

MANHOLE COVER MANUFACTURED BY : EAST JORDAN IRON WORKS, INC
P.O. BOX 439 EAST JORDAN, MI. 49727
1-800-874-410 FAX 231-536-4100

PRODUCT NUMBER: 41432323A01
CATALOG NUMBER: V1432-3
EST. WT. COVER - 210 LBS / 95 kg
MATERIAL SPEC: COVER - GRAY IRON ASTM A48 CL35
LOAD RATING: HEAVY DUTY

CITY OF BELTON, TEXAS
DEPARTMENT OF PUBLIC WORKS

STORM DRAIN MANHOLE SET

CONSTRUCTION STANDARDS AND DETAILS

D-08
SCALE: N.T.S.
ISSUE DATE: XXX

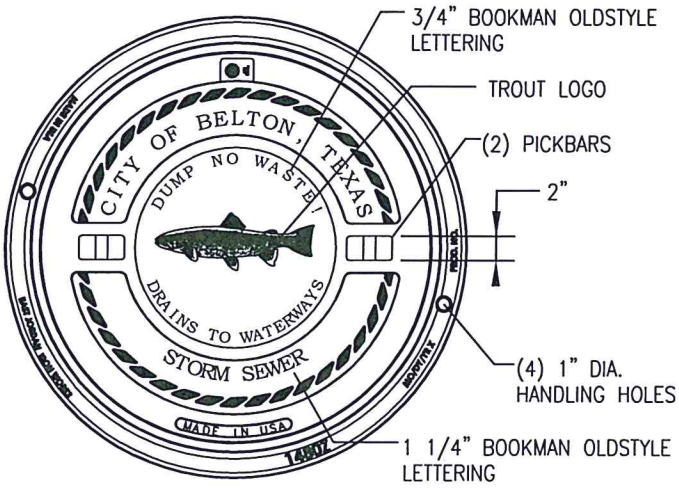

1320
1480 (WATERTIGHT & REVERSIBLE)

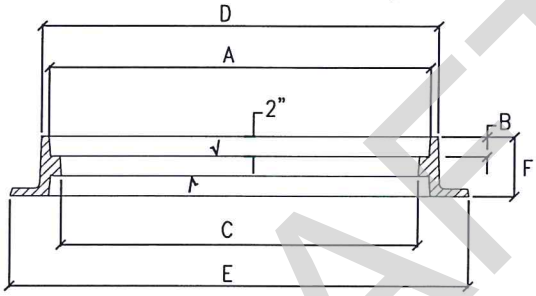

NOTE:
LID SHALL HAVE TWO (2) TYPE 4 PICK BARS AND AND LABELED "STORM DRAIN"

THE WATER-TIGHT MANHOLE SETS FEATURE SIX STAINLESS STEEL BOLTS IN COUNTERSUNK POCKETS AND A SEALING FLAT GASKET IN THE RING SET.

BOLTING PADS REDUCE THE STANDARD CLEAR OPENING BY TWO TO THREE INCHES.

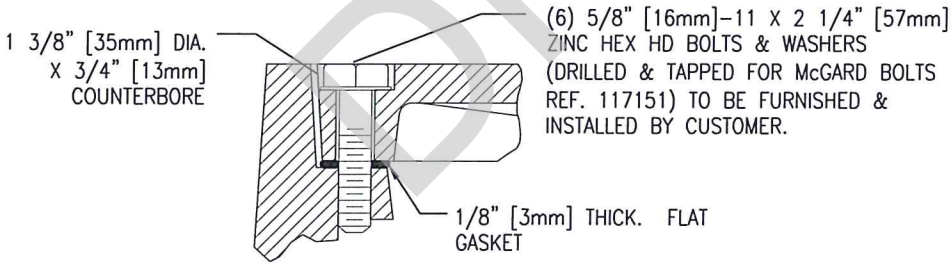

	DIMENSIONS						TOTAL
	A	B	C	D	E	F	WEIGHT
1320	32	1 1/2	30	34 7/16	46	6 1/2	505 LBS
1480	32	1 1/2	30	32 1/4	38	4	350 LBS

CITY OF BELTON, TEXAS
DEPARTMENT OF PUBLIC WORKS

WATER TIGHT STORM SEWER MANHOLE SET

CONSTRUCTION STANDARDS AND DETAILS

D-09
SCALE: N.T.S.
ISSUE DATE: XXX

DRAFT

NOTES:

1. REPLACED BASE MATERIAL OVER TRENCH SHALL BE TWICE THE THICKNESS OF THE ORIGINAL BASE.
2. BASE MATERIAL SHALL BE IN LIFTS NOT TO EXCEED 6" AND EACH LIFT THOROUGHLY ROLLED OR TAMPED TO SPECIFIED MAXIMUM DENSITY.
3. ASPHALT CONCRETE PAVEMENT JOINTS SHALL BE MECHANICALLY SAWED.
4. SURFACE MATERIAL WILL BE CONSISTENT WITH THE EXISTING SURFACE.
5. A MINIMUM OF ONE DENSITY TEST SHALL BE TAKEN EVERY TWO HUNDRED FIFTY (250) FEET FOR EACH SIX (6) INCH LIFT (10" FOR COMMON FILL OUTSIDE OF ROADWAY) OF SUBGRADE AND EACH OPEN CUT CROSSING. PROCTORS FOR MATERIALS USED IN BACKFILLING SHALL BE OBTAINED BY A CERTIFIED LABORATORY. DENSITY TESTS SHALL BE CONDUCTED BY A CERTIFIED LABORATORY OR THE PERMITTEE'S CONSULTANTS. THE PERCENTAGE OF MAXIMUM DENSITY REQUIRED SHALL BE AS STATED IN NOTE 7. ALL DENSITY TESTS SHALL BE COMPLETED AND ACCEPTED ON EACH LAYER PRIOR TO ADDITIONAL BACKFILLING. A COPY OF ALL COMPLETED AND ACCEPTED DENSITY TESTS SHALL BE FURNISHED TO CITY OF BELTON.
6. BASE TYPE

   TxDOT TYPE A – GRADE 2 CRUSHED LIMESTONE BASE COMPACTED TO 95% OF MAXIMUM DENSITY AS DETERMINED BY ASTM D1557 (METHOD D) AT OPTIMUM MOISTURE +2% PROCTOR TO BE PROVIDED BY THE CONTRACTOR TO THE CITY INSPECTOR. COMPACTED NATIVE MATERIAL: COMPACT PER FIELD DENSITY CONTROL REQUIREMENTS TABLE. SELECT MATERIAL: COMPACT PER FIELD DENSITY CONTROL REQUIREMENTS TABLE.

FIELD DENSITY CONTROL REQUIREMENTS

DESCRIPTION	DENSITY	MOISTURE CONTROL
	TEX – 115 – E	
PI ≤ 15	≥ 98% MAXIMUM DRY DENSITY	
15 < PI ≤ 35	98% ≥ MAX. DRY DENSITY ≤ 102%	≥ OPTIMUM MOISTURE CONTENT
PI > 35	95% ≥ MAX. DRY DENSITY ≤ 100%	≥ OPTIMUM MOISTURE CONTENT

7. CONTRACTOR OR ENGINEER MAY USE FLOWABLE BACKFILL AS AN ALTERNATE BACKFILL MATERIAL
8. PIPE SHALL BE REINFORCED CONCRETE PIPE CLASS III UNLESS THE DEPTH OF PIPE REQUIRES A STRONGER CLASS. PIPE SHALL HAVE A MINIMUM OF 24" COVER IN UNPAVED AREAS AND 18" OF COVER FROM BOTTOM OF SUBGRADE IN PAVED AREAS. WHERE LESS THAN 36" OF COVER IS PROVIDED, CLASS IV REINFORCED CONCRETE PIPE SHALL BE USED. IN NO CASE SHALL A STORM SEWER HAVE LESS THAN 12" OF COVER OVER THE TOP OF PIPE.
9. HIGH DENSITY POLYETHYLENE (HDPE) PIPE MAY BE USED UP TO 48–INCHES IN DIAMETER IN UNPAVED AREAS OUTSIDE OF CITY STREETS, OR OUTSIDE OF FUTURE CITY STREETS. BACKFILL SHALL BE PER PIPE MANUFACTURER. TRANSITION TO RCCP SHALL OCCUR 8'–0" PRIOR TO END.
10. ALL FITTINGS AND WYES SHALL BE MANUFACTURED AND NOT CONSTRUCTED ON THE PROJECT WITHOUT PRIOR APPROVAL FROM PUBLIC WORKS.
11. ALL JOINTS THAT ARE NOT SEALED WITH A WATERTIGHT CONNECTION SHALL BE WRAPPED WITH MARAFI–140–N GEOTEXTILE FABRIC OR APPROVED EQUIVALENT. THE JOINT SHALL BE WRAPPED WITH 18" WIDE FABRIC SPLITTING THE JOINT.
12. EMBEDMENT FOR RCP STORM SEWER SHALL BE AS FOLLOWS:

GRADATION
(ASTM C33–SIZE 56)

SIEVE SIZE	ASTM C33 SPECIFICATIONS
1–1/2"	100
1"	90–100
3/4"	40–90
1/2"	15–60
No. 4	0–5
No.200	1.0 max

L.A. ABRASION
(ASTM C–131, GRADING "B")

PERCENT LOSS: 50 max

NOTE:
1. SEE D–11 FOR TRENCH WIDTH DEFINITION.

DRAFT

CITY OF BELTON, TEXAS
DEPARTMENT OF PUBLIC WORKS

TRENCH AND EMBEDMENT NOTES FOR STORM SEWER

CONSTRUCTION STANDARDS AND DETAILS

D–10
SCALE: N.T.S.
ISSUE DATE: XX

*TRENCH WIDTH

PIPE LESS THAN 20" DIAMETER
1'-0" + PIPE O.D.
20" DIAMETER AND LARGER
2'-0" + PIPE O.D.

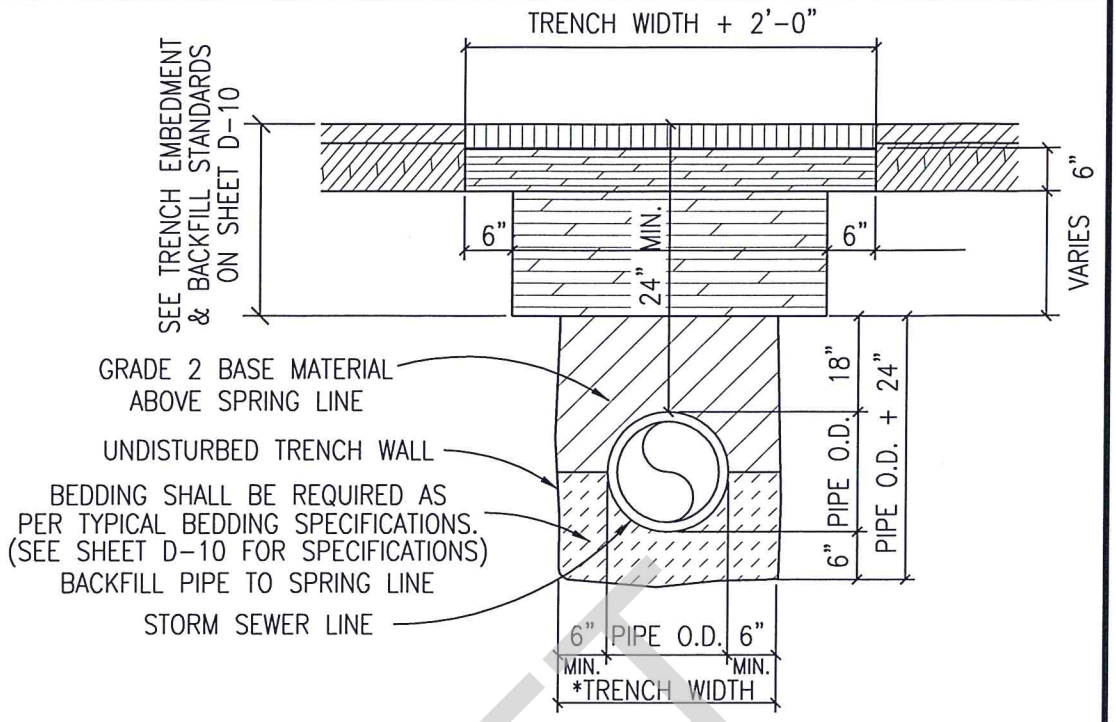

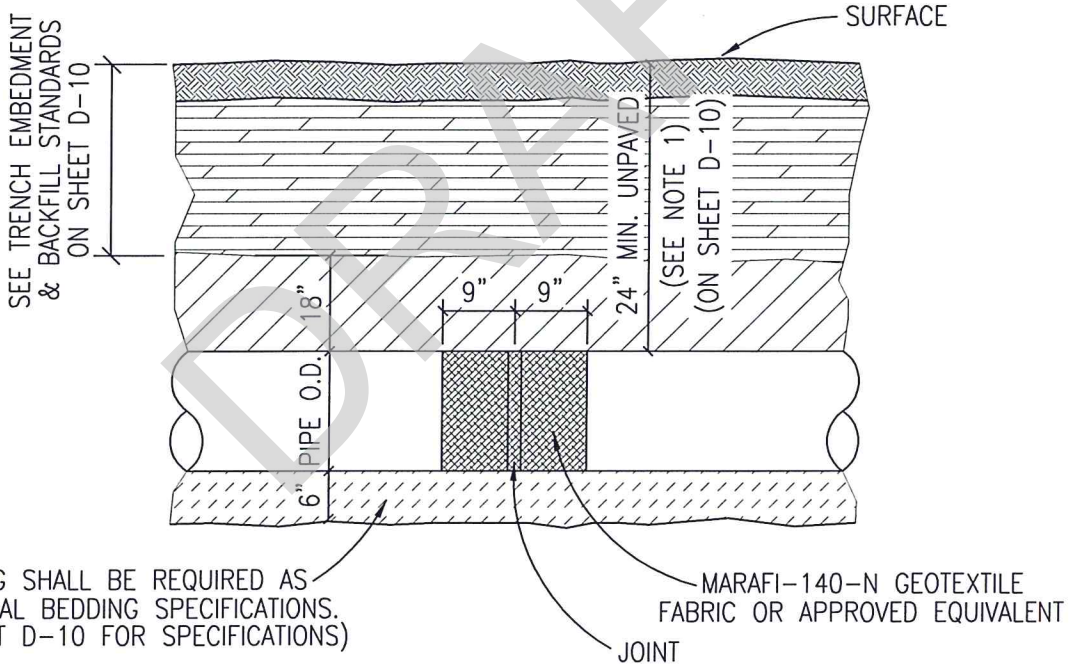

DRAFT

CITY OF BELTON, TEXAS
DEPARTMENT OF PUBLIC WORKS

TRENCH AND EMBEDMENT DETAIL FOR STORM SEWER

CONSTRUCTION STANDARDS AND DETAILS

D-11
SCALE: N.T.S.
ISSUE DATE: XXX

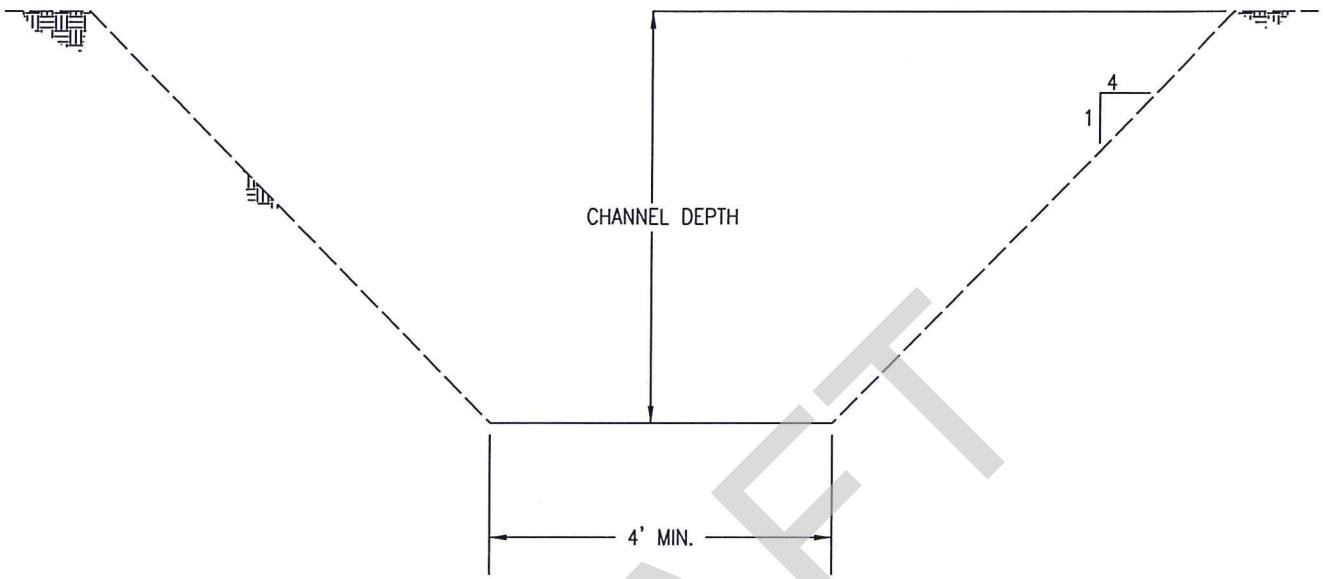

NOTES:

1. MINIMUM LONGITUDINAL SLOPE OF CHANNEL IS 0.5%.
2. CHANNELS SHALL BE VEGETATED BY HYDRO-MULCHING, SODDING OR SEEDING.
3. FENCING MAY BE REQUIRED AT DISCRETION OF CITY ENGINEER.
4. CONCRETE PILOT CHANNELS ARE REQUIRED IN ALL UN-LINED CHANNELS.
5. PILOT CHANNELS SHALL HAVE CONTRACTION JOINTS EVERY 20'.

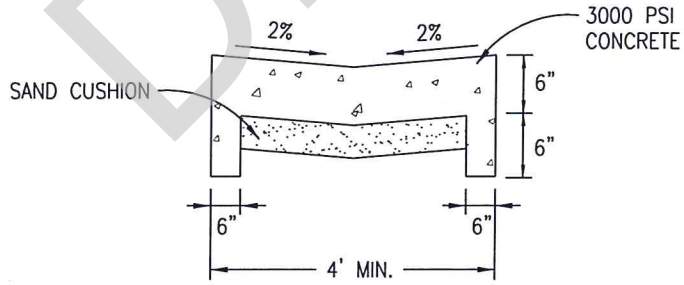

TYPICAL CONCRETE PILOT CHANNEL

DRAFT

CITY OF BELTON, TEXAS
DEPARTMENT OF PUBLIC WORKS

GRASS LINED CHANNEL

CONSTRUCTION STANDARDS AND DETAILS

D-12
SCALE: N.T.S.
ISSUE DATE: XXX

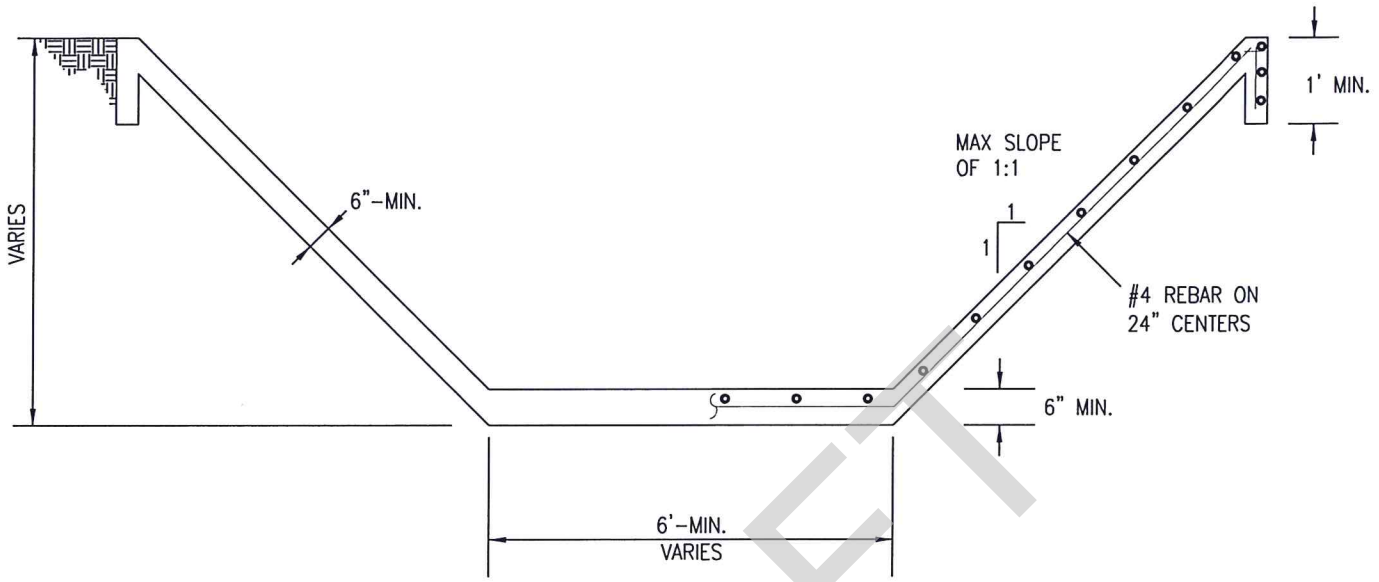

DRAFT

NOTES:

1. CONCRETE SHALL BE MINIMUM 3,000 PSI COMPRESSIVE STRENGTH (28-DAYS).
2. MINIMUM LONGITUDINAL SLOPE OF CHANNEL IS 0.5%.
3. CONCRETE SHALL BE MINIMUM 6 - INCHES THICK WITH 1 - FOOT MINIMUM TOES AT EDGES.
4. REINFORCEMENT SHALL BE #4 ASTM A-615 GRADE 60 BARS, 12" ON CENTER EACH WAY. REINFORCEMENT TO HAVE 2" MINIMUM COVER.
5. ALL CONCRETE SHALL BE GIVEN A BROOM FINISH UNLESS OTHERWISE SPECIFIED.
6. FENCING MAY BE REQUIRED AT DISCRETION OF THE CITY ENGINEER.

CITY OF BELTON, TEXAS
DEPARTMENT OF PUBLIC WORKS

CONCRETE LINED CHANNEL

CONSTRUCTION STANDARDS AND DETAILS

D-13
SCALE: N.T.S.
ISSUE DATE: XXX

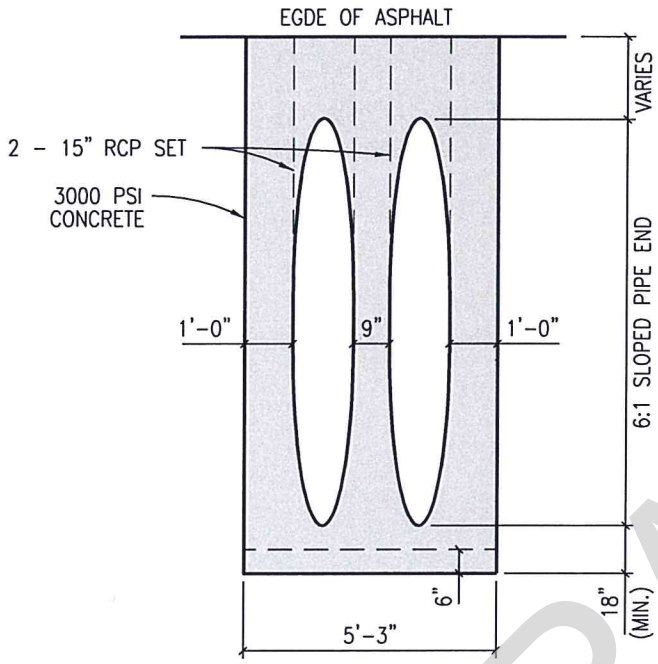

2 - 15" RCP SET
NOT TO SCALE

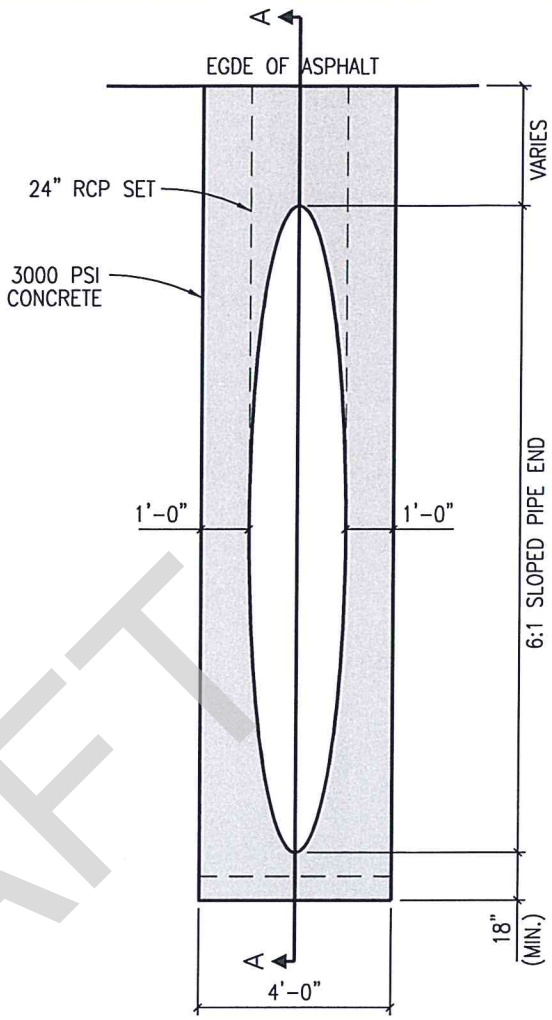

24" RCP SET
NOT TO SCALE

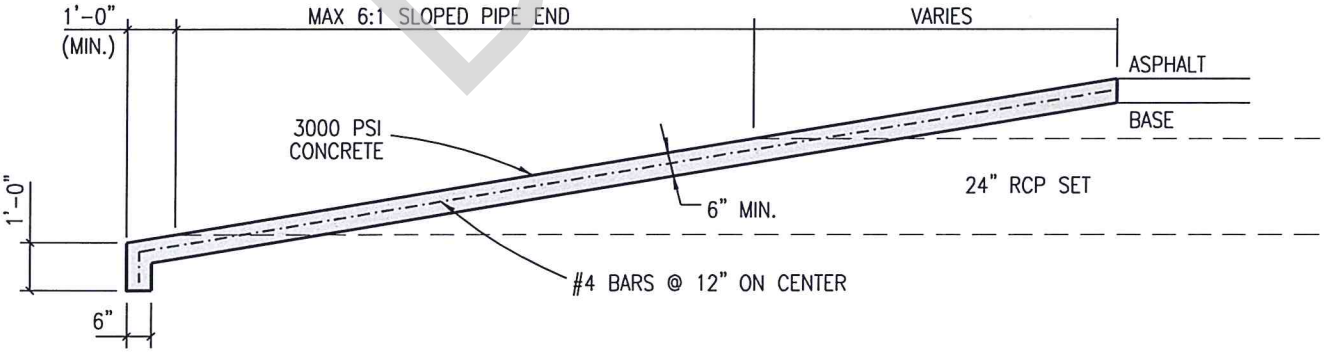

SECTION A-A
NOT TO SCALE

DRAFT

CITY OF BELTON, TEXAS
DEPARTMENT OF PUBLIC WORKS

TYPICAL SLOPED END TREATMENT

CONSTRUCTION STANDARDS AND DETAILS

D-14
SCALE: N.T.S.
ISSUE DATE: XXX

ROCK RIPRAP			
CLASS	D_{50}(IN)	APRON LENGTH	APRON DEPTH
1	5	4D	3.5 D_{50}
2	6	4D	3.3 D_{50}
3	10	5D	2.4 D_{50}
4	14	6D	2.2 D_{50}
5	20	7D	2.0 D_{50}
6	22	8D	2.0 D_{50}

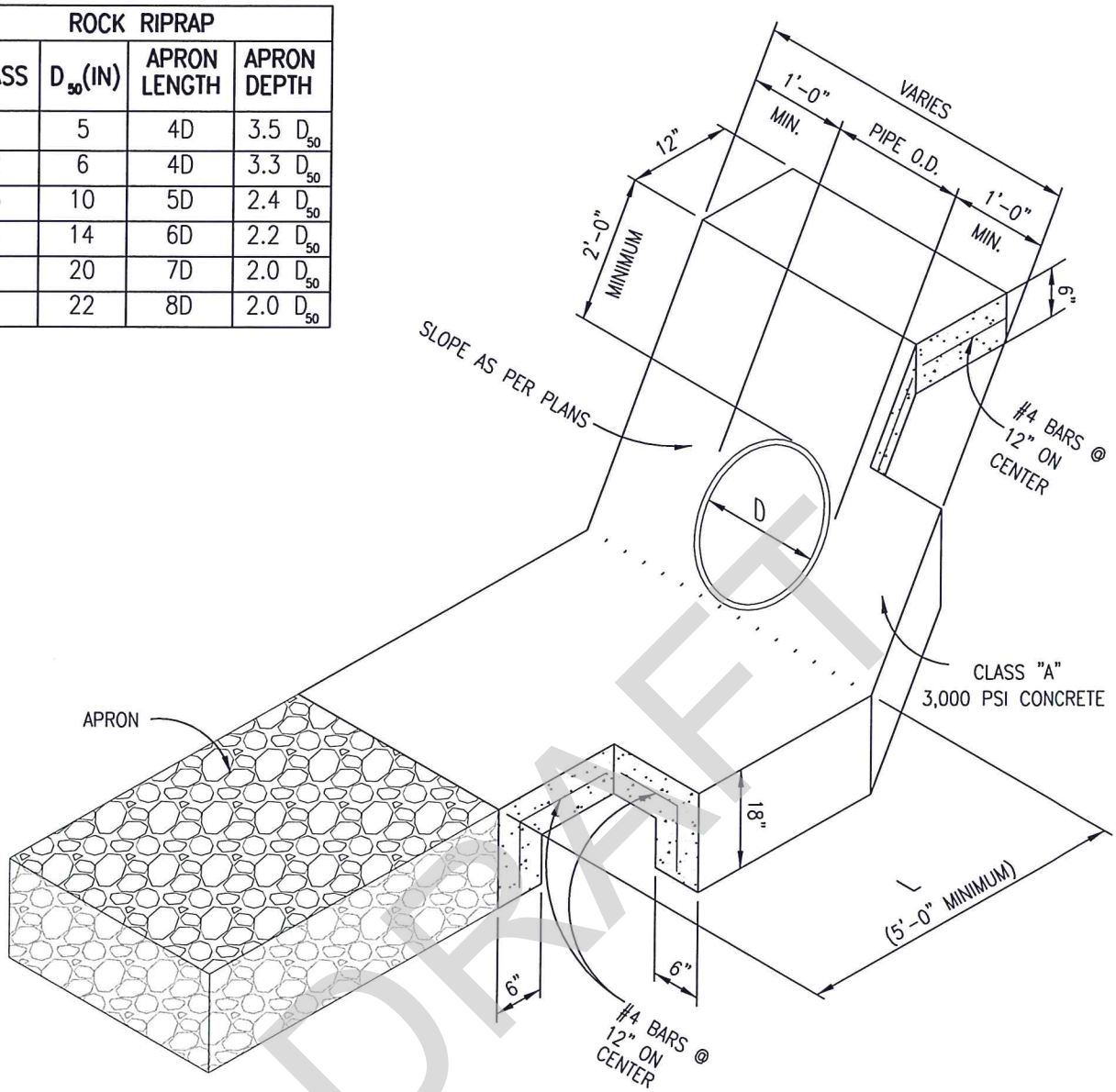

L = 0.2 VD
L = APRON LENGTH, FEET
V = CULVERT DISCHARGE VELOCITY FT/SEC.
D = HEIGHT OF BOX CULVERT OR DIAMETER OF PIPE CULVERT, FEET.

DRAFT

NOTES:

1. WHEN HEADWALLS AND WINGWALLS ARE REQUIRED, THEY SHALL CONFORM TO THE TEXAS DEPARTMENT OF TRANSPORTATION STANDARDS, OR AS DIRECTED BY THE CITY.
2. ENERGY DISSIPATERS SHALL BE REQUIRED IF PIPE VELOCITY IS GREATER THAN 6.0 F.P.S. OR AS DIRECTED BY THE CITY OF BELTON.
3. THE LENGTH OF THE CONCRETE APRON SHALL BE DETERMINED BY THE EQUATION LISTED ABOVE.

CITY OF BELTON, TEXAS
DEPARTMENT OF PUBLIC WORKS

CONCRETE RIP-RAP AT PIPE

CONSTRUCTION STANDARDS AND DETAILS

D-15
SCALE: N.T.S.
ISSUE DATE: XXX

ROCK RIPRAP		
D_{50}(IN)	APRON LENGTH	APRON DEPTH
5	4D	3.5 D_{50}
6	4D	3.3 D_{50}
10	5D	2.4 D_{50}
14	6D	2.2 D_{50}
20	7D	2.0 D_{50}
22	8D	2.0 D_{50}

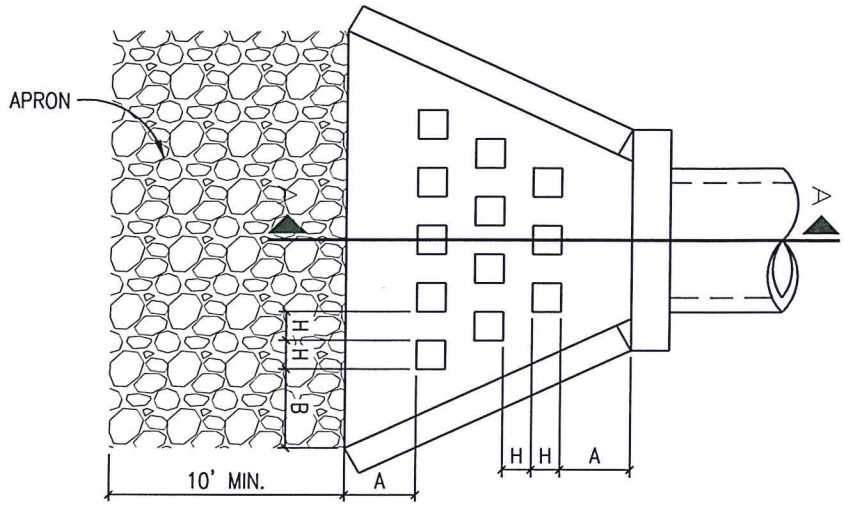

PLAN VIEW

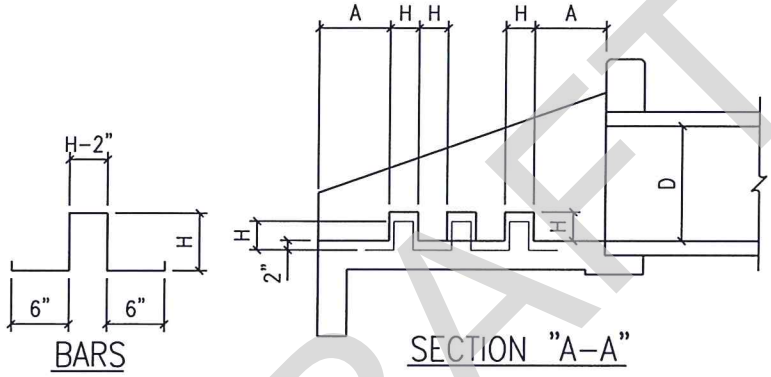

BARS

SECTION "A-A"

NOTES:

1. USE CLASS "A" CONCRETE, 3,000 PSI AT 28 DAYS, UNLESS NOTED.
2. REINFORCING STEEL - ASTM A615, GRADE 60, UNLESS NOTED.
3. LAP REINFORCING 30 BAR DIAMETERS MIN. AT SPLICES, UNLESS NOTED.
4. CHAMFER EXPOSED EDGES OF CONCRETE 3/4", UNLESS NOTED.
5. PLACE REINFORCING WITH THE CENTER OF THE OUTSIDE BARS 2 INCHES FROM THE SURFACE OF THE CONCRETE.

D PIPE DIAMETER (INCHES)	NUMBER OF ROWS OF DISSIPATORS	NUMBER OF DISSIPATORS IN FRONT ROW	H (INCHES)	A (INCHES)	B (INCHES)
12	1	3	4	4	9.1875
18	2	4	4 1/2	9 1/2	15.5625
24	2	5	6	14 3/4	16 1/2
30	3	6	7 1/2	12 1/2	14 3/8
36	3	6	9	16 1/4	18 5/16
42	3	6	10 1/2	20	22 1/4
48	3	6	12	23 3/4	26 1/4
54	3	6	13 1/2	27 1/2	27 3/4
60	3	6	15	31 1/4	31 5/8

DRAFT

CITY OF BELTON, TEXAS

DEPARTMENT OF PUBLIC WORKS

ENERGY DISSIPATOR

CONSTRUCTION STANDARDS AND DETAILS

D-16

SCALE: N.T.S.

ISSUE DATE: XXX

NOTE: THIS SECTION IS INTENDED TO ASSIST THOSE PERSONS PREPARING STORMWATER POLLUTION PREVENTION PLANS (SW3P) THAT COMPLY WITH FEDERAL, STATE AND/OR LOCAL STORMWATER REGULATIONS.

1. CONTRACTOR TO INSTALL AND MAINTAIN EROSION/SEDIMENTATION CONTROLS AND TREE/NATURAL AREA PROTECTIVE FENCING PRIOR TO ANY SITE PREPARATION WORK (CLEARING, GRUBBING, GRADING, OR EXCAVATION). CONTRACTOR TO REMOVE EROSION/SEDIMENTATION CONTROLS AT THE COMPLETION OF PROJECT AND GRASS RESTORATION.

2. PLACEMENT OF EROSION/SEDIMENTATION CONTROLS TO BE IN ACCORDANCE WITH THE APPROVED EROSION AND SEDIMENTATION CONTROL PLAN AND STATE APPROVED SW3P. DEVIATIONS FROM THE APPROVED PLAN MUST BE SUBMITTED TO AND APPROVED BY THE CITY ENGINEER OR THEIR REPRESENTATIVE. THE CITY OF BELTON SHALL BE COPIED ON ALL CORRESPONDENCE RELATED TO SW3P INCLUDING (NOI, NOC, NOT, AND WEEKLY INSPECTION REPORTS.)

3. ALL DISTURBED AREAS TO BE RESTORED TO PREVIOUS CONDITION.

4. SEEDING FOR EROSION CONTROL TO BE APPLIED OVER AREAS DISTURBED BY CONSTRUCTION AS FOLLOWS:
   FROM SEPTEMBER 15 TO MARCH 1, SEEDING TO BE WITH A COMBINATION OF 2 POUNDS PER 1,000 SQUARE FEET OF UNHULLED BERMUDA AND 2 POUNDS PER 1,000 SQUARE FEET OF WINTER RYE WITH A PURITY OF 95% WITH 90% GERMINATION.
   FROM MARCH 2, TO SEPTEMBER 14, SEEDING TO BE WITH HULLED BERMUDA GRASS (CYNODEN DACTOLYN) AT A RATE OF 2 POUNDS PER 1,000 SQUARE FEET WITH A PURITY OF 95% WITH 85% GERMINATION.

5. PLANTED AREA TO BE IRRIGATED OR SPRINKLED IN A MANNER THAT WILL NOT ERODE THE TOPSOIL, BUT WILL SUFFICIENTLY SOAK THE SOIL TO A MINIMUM DEPTH OF FOUR (4) INCHES. THE IRRIGATION TO OCCUR AT 7-DAY (MINIMUM) INTERVALS DURING THE FIRST TWO MONTHS. RAINFALL OCCURRENCES OF 1/2 INCH MINIMUM OR GREATER TO POSTPONE THE WATERING SCHEDULE ONE WEEK.

6. RESTORATION TO BE ACCEPTABLE WHEN THE GRASS HAS GROWN AT LEAST 12 INCHES HIGH WITH 95% COVERAGE, PROVIDED NO BARE SPOTS LARGER THAN 25 SQUARE FEET EXIST AFTER FIRST MOWING.

7. A MINIMUM OF FOUR (4) INCHES OF TOPSOIL TO BE PLACED IN ALL AREAS DISTURBED BY CONSTRUCTION.

8. CONTRACTOR TO HYDROMULCH OR SOD (AS SHOWN ON PLANS) ALL EXPOSED CUTS AND FILLS UPON COMPLETION OF CONSTRUCTION.

9. EROSION AND SEDIMENTATION CONTROLS TO BE INSTALLED OR MAINTAINED IN A MANNER WHICH DOES NOT RESULT IN SOIL BUILDUP WITHIN TREE DRIPLINE.

10. TO AVOID SOIL COMPACTION, CONTRACTOR SHALL NOT ALLOW VEHICULAR TRAFFIC, PARKING, OR STORAGE OF EQUIPMENT OR MATERIALS IN THE TREE DRIPLINE AREAS.

11. WHERE A FENCE IS CLOSER THAN FOUR (4) FEET TO A TREE TRUNK, PROTECT THE TRUNK WITH STRAPPED-ON PLANKING TO A HEIGHT OF EIGHT (8) FEET (OR TO THE LIMITS OF LOWER BRANCHING) IN ADDITION TO THE FENCING.

12. TREES TO BE REMOVED IN A MANNER WHICH DOES NOT IMPACT TREES TO BE PRESERVED.

13. ANY ROOT EXPOSED BY CONSTRUCTION ACTIVITY TO BE PRUNED FLUSH WITH THE SOIL. BACKFILL ROOT AREAS WITH GOOD QUALITY TOPSOIL AS SOON AS POSSIBLE. IF EXPOSED ROOT AREAS ARE NOT BACKFILLED WITHIN TWO DAYS, COVER THEM WITH ORGANIC MATERIAL IN A MANNER WHICH REDUCES SOIL TEMPERATURE AND MINIMIZES WATER LOSS DUE TO EVAPORATION.

14. CONTRACTOR TO PRUNE VEGETATION TO PROVIDE CLEARANCE FOR STRUCTURES, VEHICULAR TRAFFIC, AND EQUIPMENT BEFORE DAMAGE OCCURS (RIPPING OF BRANCHES, ETC.). PRUNING INCLUDES DISINFECTING ALL PRUNING EQUIPMENT BETWEEN BUSHES AND TREES. BLEACH, OR AN APPROVED EQUIVALENT, MAY BE USED TO DISINFECT EQUIPMENT.

DRAFT

15. CONTRACTOR IS TO INSPECT THE CONTROLS AT WEEKLY INTERVALS AND AFTER EVERY RAINFALL EXCEEDING 1/2 INCH TO VERIFY THAT THEY HAVE NOT BEEN SIGNIFICANTLY DISTURBED. ANY ACCUMULATED SEDIMENT AFTER A SIGNIFICANT RAINFALL TO BE REMOVED AND PLACED IN THE OWNER DESIGNATED SPOIL DISPOSAL SITE. THE CONTRACTOR TO CONDUCT PERIODIC INSPECTIONS OF ALL EROSION/SEDIMENTATION CONTROLS AND TO MAKE ANY REPAIRS OR MODIFICATIONS NECESSARY TO ASSURE CONTINUED EFFECTIVE OPERATION OF EACH DEVICE.

16. WHERE THERE IS TO BE AN APPROVED GRADE CHANGE, IMPERMEABLE PAVING SURFACE, TREE WELL, OR OTHER SUCH SITE DEVELOPMENT IMMEDIATELY ADJACENT TO A PROTECTED TREE, ERECT THE FENCE APPROXIMATELY TWO TO FOUR FEET (2'–4') BEHIND THE AREA IN QUESTION.

17. NO ABOVE AND/OR BELOW GROUND TEMPORARY FUEL STORAGE FACILITIES TO BE STORED ON THE PROJECT SITE.

18. IF EROSION AND SEDIMENTATION CONTROL SYSTEMS ARE EXISTING FROM PRIOR CONTRACTS, CITY ENGINEER AND THE CONTRACTOR TO EXAMINE THE EXISTING EROSION AND SEDIMENTATION CONTROL SYSTEMS FOR DAMAGE PRIOR TO CONSTRUCTION. ANY DAMAGE TO PREEXISTING EROSION AND SEDIMENTATION CONTROLS NOTED TO BE REPAIRED AT CONTRACTOR'S EXPENSE.

19. INTENTIONAL RELEASE OF VEHICLE OR EQUIPMENT FLUIDS ONTO THE GROUND IS PROHIBITED. CONTAMINATED SOIL RESULTING FROM ACCIDENTAL SPILL TO BE REMOVED AND DISPOSED OF PROPERLY BY THE CONTRACTOR AT THE CONTRACTORS EXPENSE.

20. ALL (SW3P) PLANS AND EROSION CONTROL MEASURES MUST BE INSPECTED AND APPROVED BY A CITY CONSTRUCTION INSPECTOR PRIOR TO COMMENCING ANY OTHER CONSTRUCTION ACTIVITIES.

21. IN THE EVENT OF A CONFLICT BETWEEN THE SPECIFIED REQUIREMENTS AND STORMWATER POLLUTION CONTROL LAWS, RULES, REGULATIONS OR OTHER LOCAL, STATE OR FEDERAL AGENCIES, THE MORE RESTRICTIVE LAWS, RULES OR STANDARDS SHALL APPLY.

22. UPON COMPLETION OF CONSTRUCTION AND ACHIEVEMENT AND FINAL STABILIZATION, PROPERLY REMOVE THE TEMPORARY POLLUTANT CONTROL STRUCTURES AND COMPLETE THE AREA AS REQUIRED.

23. THE TCEQ GENERAL PERMIT SHALL BE POSTED AT THE JOB SITE WITH ALL OTHER REQUIRED DOCUMENTS. THE SW3P SHALL ALSO BE AVAILABLE ON THE JOB SITE.

DRAFT

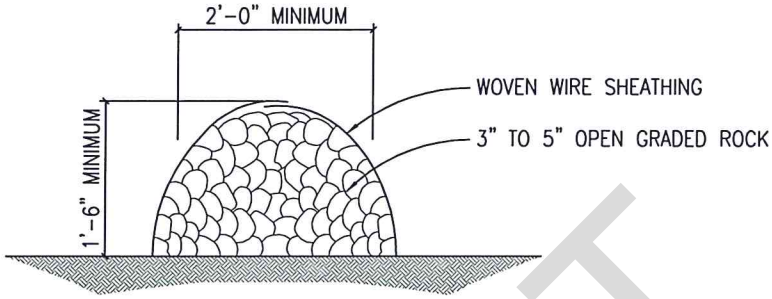

CROSS SECTION

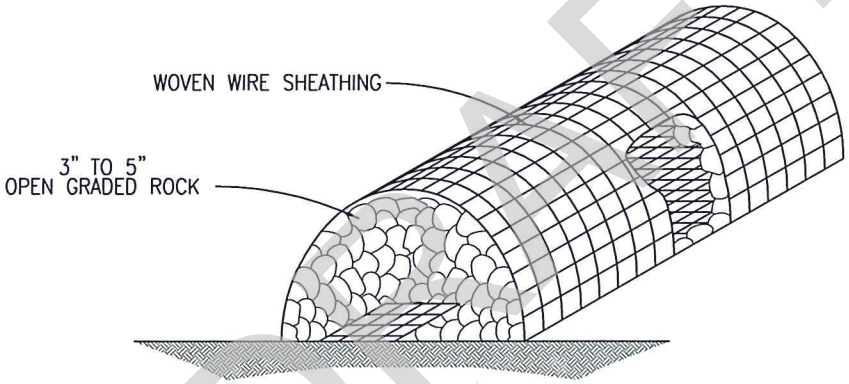

DRAFT

INSTALLATION:

- LAYOUT THE ROCK BERM FOLLOWING AS CLOSELY AS POSSIBLE TO THE CONTOUR.
- CLEAR THE GROUND OF DEBRIS, ROCKS OR PLANTS THAT WILL INTERFERE WITH INSTALLATION.
- PLACE WOVEN WIRE FABRIC ON THE GROUND ALONG THE PROPOSED INSTALLATION WITH ENOUGH OVERLAP TO COMPLETELY ENCIRCLE THE FINISHED SIZE OF THE BERM.
- PLACE THE ROCK ALONG THE CENTER OF THE WIRE TO THE DESIGNATED HEIGHT.
- WRAP THE STRUCTURE WITH THE PREVIOUSLY PLACED WIRE MESH SECURE ENOUGH SO THAT WHEN WALKED ACROSS THE STRUCTURE RETAINS IT'S SHAPE.
- SECURE WITH TIE WIRE.

CITY OF BELTON, TEXAS
DEPARTMENT OF PUBLIC WORKS

ROCK BERM

CONSTRUCTION STANDARDS AND DETAILS

D-19
SCALE: N.T.S.
ISSUE DATE: XXX

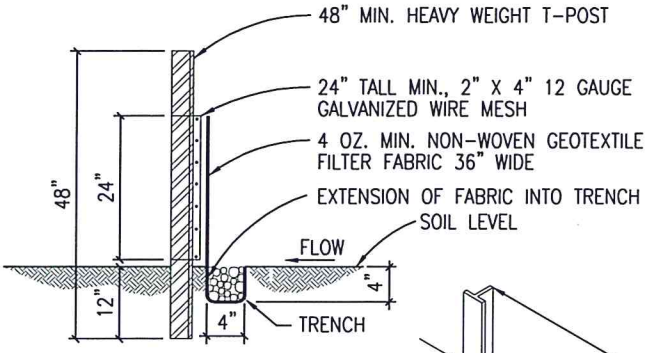

CROSS SECTION

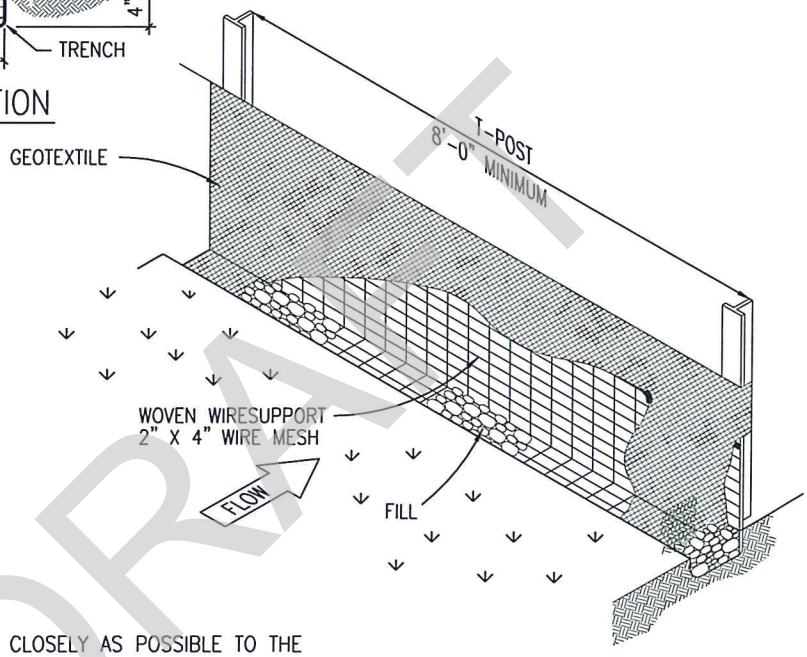

DRAFT

INSTALLATION:

- LAYOUT THE SILT FENCE FOLLOWING AS CLOSELY AS POSSIBLE TO THE CONTOUR.
- CLEAR THE GROUND OF DEBRIS, ROCKS, PLANTS (INCLUDING GRASSES TALLER THAN 2") TO PROVIDE A SMOOTH FLOW APPROACH SURFACE. EXCAVATE 4" DEEP X 4" WIDE TRENCH ON UPSTREAM SIDE OF FACE PER PLANS.
- DRIVE THE HEAVY DUTY T-POST AT LEAST 12 INCHES INTO THE GROUND AND AT A SLIGHT ANGLE TOWARDS THE FLOW.
- ATTACH THE 2" X 4" 12 GAUGE WELDED WIRE MESH TO THE T-POST WITH 11 1/2 GAUGE GALVANIZED T-POST CLIPS. THE TOP OF THE WIRE TO BE 24" ABOVE GROUND LEVEL. THE WELDED WIRE MESH TO BE OVERLAPPED 6" AND TIED AT LEAST 6 TIMES WITH HOG RINGS.
- THE SILT FENCE TO BE INSTALLED WITH A SKIRT A MINIMUM OF 11" WIDE PLACED ON THE UPHILL SIDE OF THE FENCE INSIDE EXCAVATED TRENCH. THE FABRIC TO OVERLAP THE TOP OF THE WIRE BY 1".
- ANCHOR THE SILT FENCE BY BACKFILLING WITH EXCAVATED DIRT AND ROCKS.
- GEOTEXTILE SPLICES SHOULD BE A MINIMUM OF 18" WIDE ATTACHED IN AT LEAST 6 PLACES. SPLICES IN CONCENTRATED FLOW AREAS WILL NOT BE ACCEPTED.

CITY OF BELTON, TEXAS
DEPARTMENT OF PUBLIC WORKS

SILT FENCE

CONSTRUCTION STANDARDS AND DETAILS

D-20
SCALE: N.T.S.
ISSUE DATE: XXX

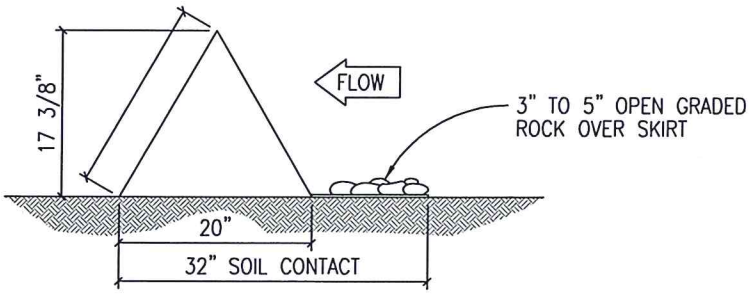

CROSS SECTION

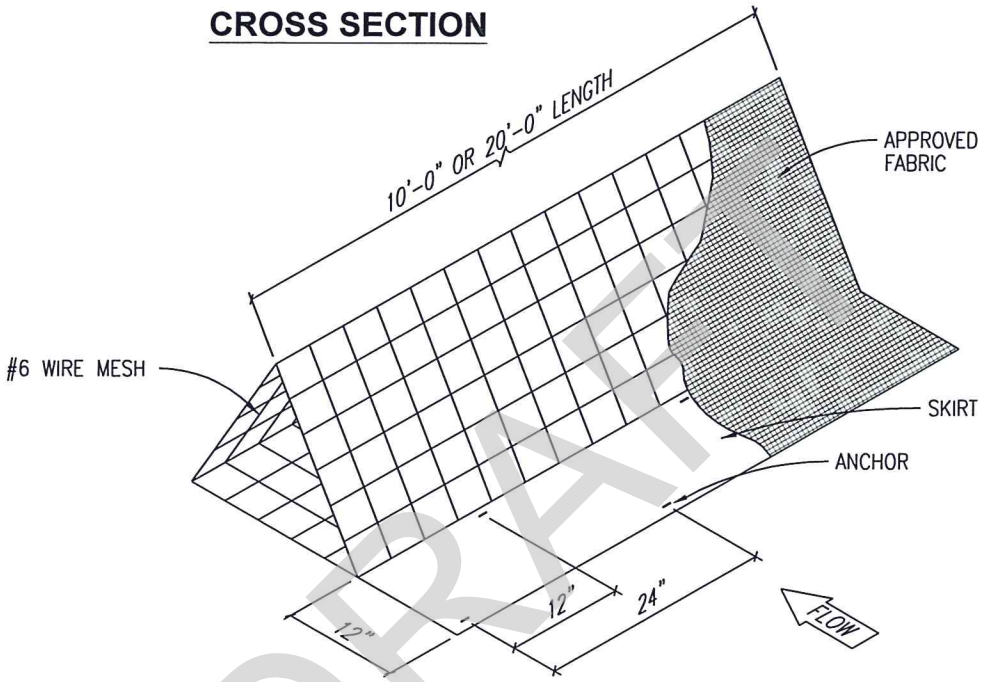

DRAFT

INSTALLATION:

- LAYOUT THE FILTER DIKE FOLLOWING AS CLOSELY AS POSSIBLE TO THE CONTOUR.
- CLEAR THE GROUND OF DEBRIS, ROCKS OR PLANTS THAT WILL INTERFERE WITH INSTALLATION.
- PLACE THE FILTER DIKE SECTIONS ONE AT A TIME, WITH THE SKIRT ON THE UPHILL SIDES TOWARD THE DIRECTION OF FLOW, ANCHORING EACH SECTION TO THE GROUND BEFORE THE NEXT SECTION IS PLACED.
- ANCHORS SHOULD BE PLACED ON 2'-0" CENTERS ALTERNATING FROM FRONT TO BACK SO THAT THERE IS ACTUALLY ONLY 1'-0" IN BETWEEN ANCHORS.
- SECURELY FASTEN THE SKIRT FROM ONE SECTION OF FILTER DIKE TO THE NEXT.
- FILTER DIKES MUST MAINTAIN CONTINUOUS CONTACT WITH THE GROUND.

CITY OF BELTON, TEXAS
DEPARTMENT OF PUBLIC WORKS

TRIANGULAR
FILTER DIKE

CONSTRUCTION STANDARDS AND DETAILS

D-21
SCALE: N.T.S.
ISSUE DATE: XXX

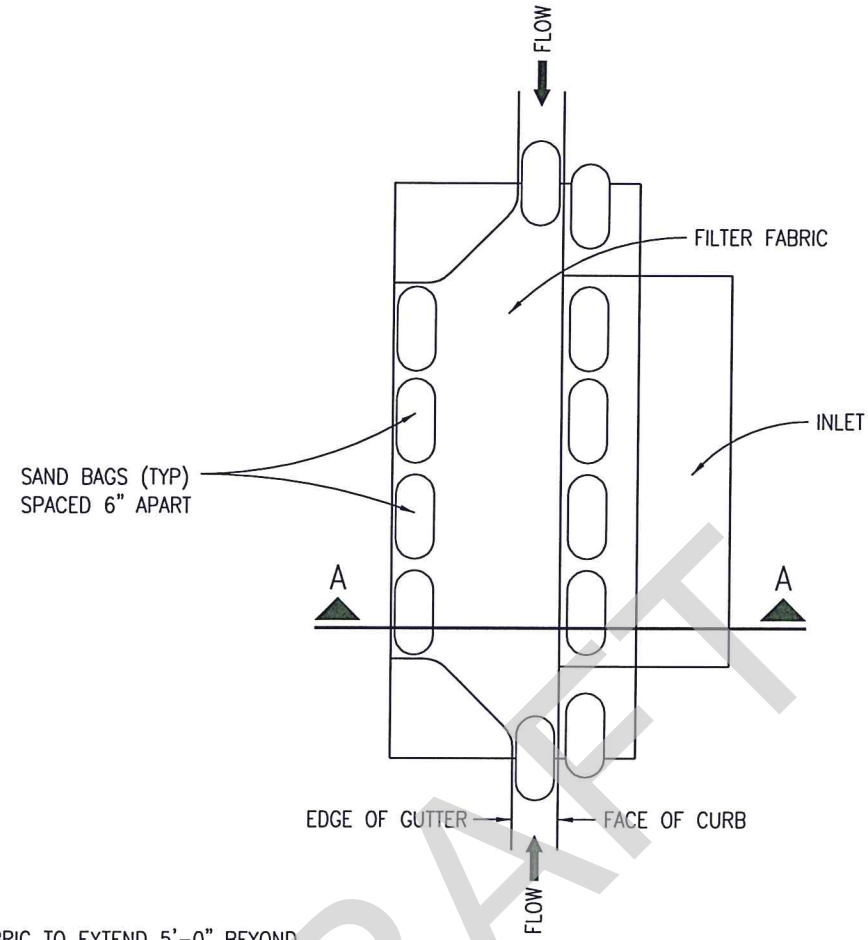

PLAN

NOT TO SCALE

NOTE:

FILTER FABRIC TO EXTEND 5'-0" BEYOND INLET OPENING, UPSTREAM OF INLET. TERMINATE FABRIC IN STREET GUTTER WITH SAND BAGS PLACED IN GUTTER FLOWLINE.

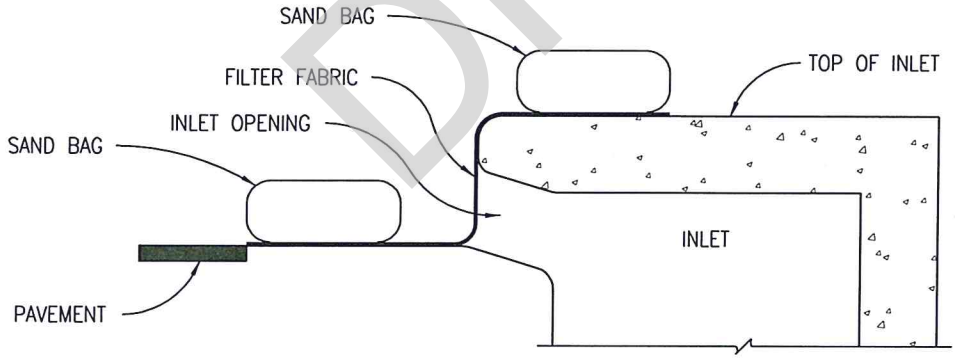

SECTION A-A

NOT TO SCALE

DRAFT

CITY OF BELTON, TEXAS

DEPARTMENT OF PUBLIC WORKS

CURB INLET PROTECTION

CONSTRUCTION STANDARDS AND DETAILS

D-22

SCALE: N.T.S.

ISSUE DATE: XXX

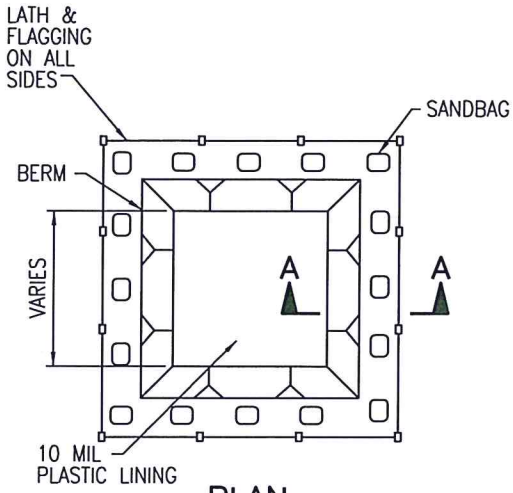

PLAN
NOT TO SCALE
TYPE "BELOW GRADE"

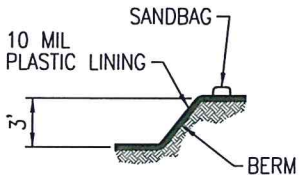

SECTION A–A
NOT TO SCALE

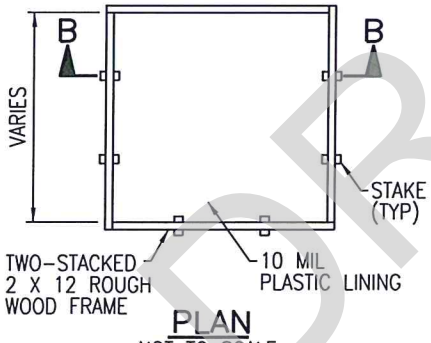

PLAN
NOT TO SCALE
TYPE "ABOVE GRADE"

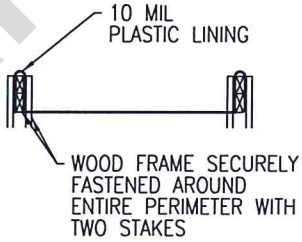

SECTION B–B
NOT TO SCALE

NOTES:

1. WASHOUT SHALL BE MINIMUM 10'x10' AND DEPTH AND CLEANOUT TO BE DETERMINED BY THE CONTRACTOR.
2. TO BE CLEANED AT A FREQUENCY TO PREVENT OVERFLOW.

DRAFT

CITY OF BELTON, TEXAS
DEPARTMENT OF PUBLIC WORKS

CONCRETE WASHOUT AREAS

CONSTRUCTION STANDARDS AND DETAILS

D–23
SCALE: N.T.S.
ISSUE DATE: XXX

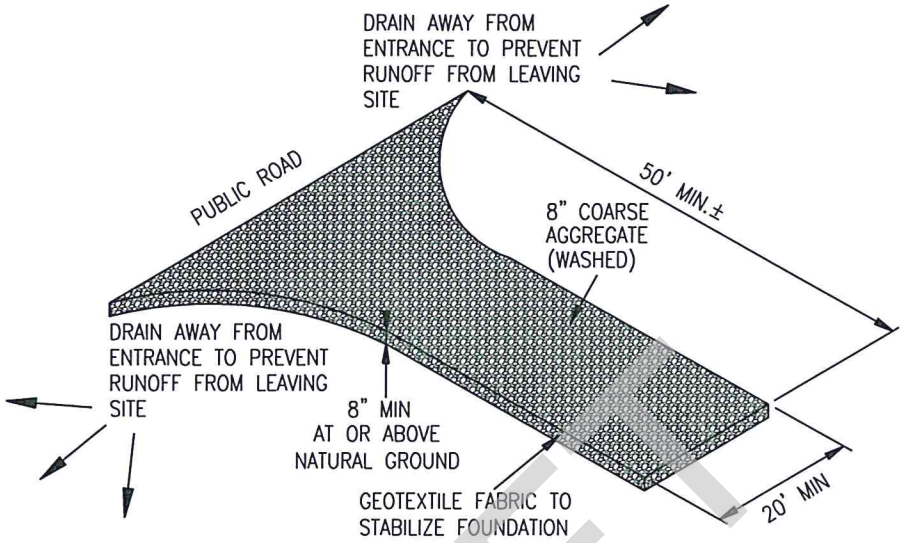

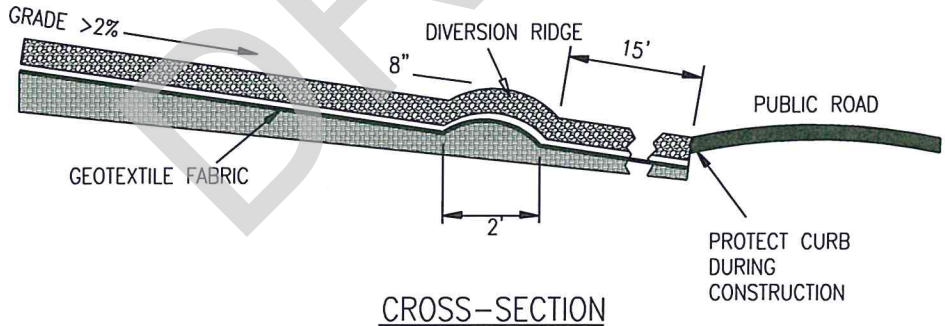

CROSS-SECTION

N.T.S.

NOTE:

1. DESIGN AND MAINTENANCE SHALL BE ADEQUATE TO PREVENT SEDIMENT FROM ENTERING THE ROADWAY.

DRAFT

CITY OF BELTON, TEXAS

DEPARTMENT OF PUBLIC WORKS

TEMPORARY CONSTRUCTION ENTRANCE/EXIT

CONSTRUCTION STANDARDS AND DETAILS

D-24

SCALE: N.T.S.

ISSUE DATE: XXX

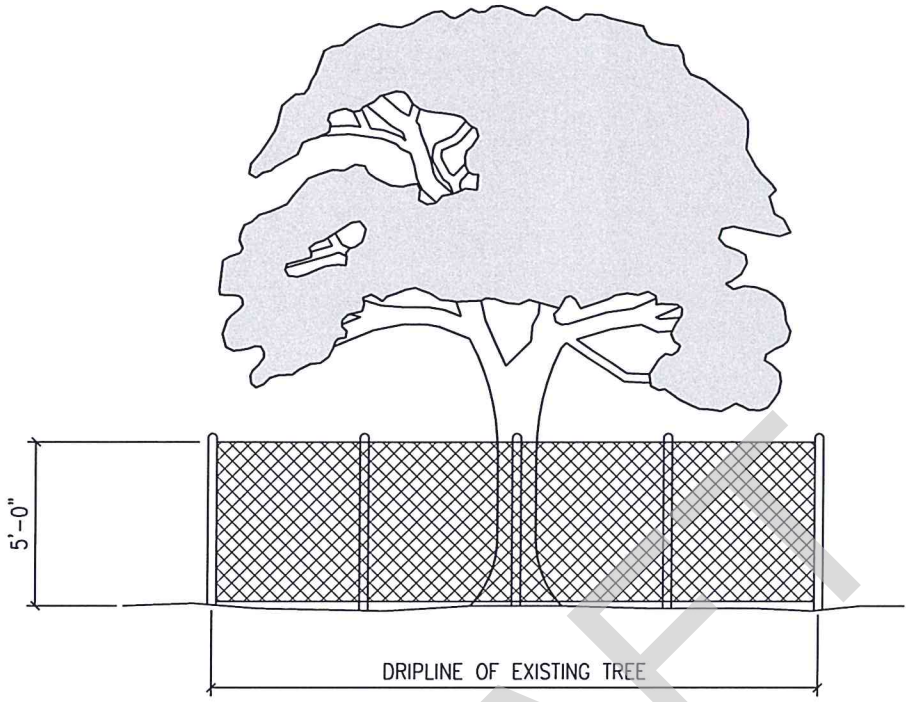

DRAFT

NOTES:

1. TREE PROTECTION FENCES SHALL BE INSTALLED PRIOR TO THE COMMENCEMENT OF ANY SITE PREPARATION WORK (CLEARING, GRUBBING OR GRADING).
2. FENCES SHALL COMPLETELY SURROUND THE TREE, OR CLUSTERS OF TREES; WILL BE LOCATED AT THE OUTERMOST LIMIT OF THE TREE BRANCHES (DRIPLINE), AND WILL BE MAINTAINED THROUGHOUT THE CONSTRUCTION PROJECT IN ORDER TO PREVENT THE FOLLOWING:
   A. SOIL COMPACTION IN THE ROOT ZONE AREA RESULTING FROM VEHICULAR TRAFFIC, OR STORAGE OF EQUIPMENT OR MATERIALS.
   B. ROOT ZONE DISTURBANCES DUE TO GRADE CHANGES (GREATER THAN SIX INCHES (6") CUT OR FILL OR TRENCHING NOT REVIEWED AND AUTHORIZED BY THE CITY.
   C. WOUNDS TO EXPOSED ROOTS, TRUNKS OR LIMBS BY MECHANICAL EQUIPMENT.
   D. OTHER ACTIVITIES DETRIMENTAL TO TREES, SUCH AS CHEMICAL STORAGE, CEMENT TRUCK CLEANING AND FIRE.
3. EXCEPTIONS TO INSTALLING FENCES AT TREE DRIPLINES MAY BE PERMITTED IN THE FOLLOWING CASES:
   A. WHERE PERMEABLE PAVING IS TO BE INSTALLED, ERECT THE FENCE AT THE OUTER LIMITS OF THE PERMEABLE PAVING AREA.
   B. WHERE TREES ARE CLOSE TO PROPOSED BUILDINGS, ERECT THE FENCE NO CLOSER THAN SIX FEET (6'-0") TO BUILDING.

CITY OF BELTON, TEXAS
DEPARTMENT OF PUBLIC WORKS

TREE PROTECTION CHAIN LINK FENCE

CONSTRUCTION STANDARDS AND DETAILS

D-25
SCALE: N.T.S.
ISSUE DATE: XXX

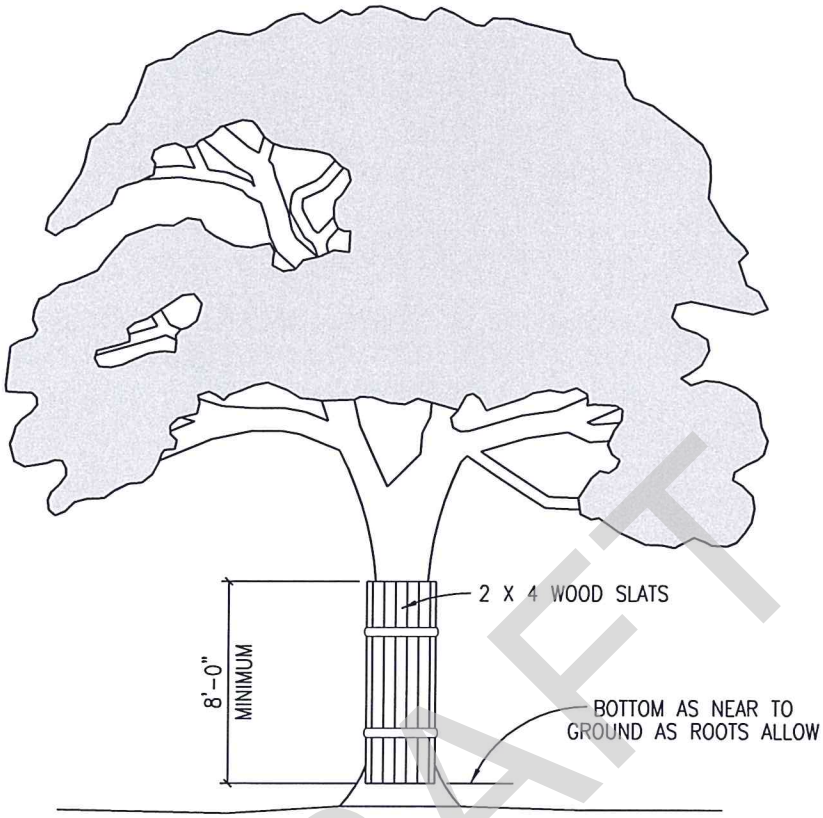

DRAFT

NOTES:

1. WHERE ANY EXCEPTIONS RESULT IN A FENCE BEING CLOSER THAN FOUR FEET (4'-0") TO A TREE TRUNK PROTECT THE TRUNK WITH STRAPPED-ON-PLANKING TO A HEIGHT OF EIGHT FEET (8'-0"), OR TO THE LIMITS OF LOWER BRANCHING IN ADDITION TO THE REDUCED FENCING PROVIDED.
2. ANY ROOTS EXPOSED BY CONSTRUCTION ACTIVITY SHALL BE PRUNED FLUSH WITH THE SOIL. BACKFILL ROOT AREAS WITH GOOD QUALITY TOP SOIL AS SOON AS POSSIBLE. IF EXPOSED ROOT AREAS ARE NOT BACKFILLED WITHIN TWO (2) DAYS, COVER THEM WITH ORGANIC MATERIAL IN A MANNER WHICH REDUCES SOIL TEMPERATURE, AND MINIMIZES WATER LOSS DUE TO EVAPORATION.
3. PRIOR EXCAVATION OR GRADE CUTTING WITHIN TREE DRIPLINE. MAKE A CLEAN CUT BETWEEN THE DISTURBED AND UNDISTURBED ROOT ZONES WITH A ROCK SAW OR SIMILAR EQUIPMENT, TO MINIMIZE DAMAGE TO REMAINING ROOTS.
4. TREES MOST HEAVILY IMPACTED BY CONSTRUCTION ACTIVITIES SHOULD BE WATERED DEEPLY ONCE A WEEK DURING PERIODS OF HOT, DRY WEATHER. TREE CROWNS SHOULD BE SPRAYED WITH WATER PERIODICALLY TO REDUCE DUST ACCUMULATION ON THE LEAVES.
5. ANY TRENCHING REQUIRED FOR THE INSTALLATION OF LANDSCAPE IRRIGATION SHALL BE PLACED AS FAR FROM EXISTING TREE TRUNKS AS POSSIBLE.
6. NO LANDSCAPE TOPSOIL DRESSING GREATER THAN FOUR INCHES (4") SHALL BE PERMITTED WITHIN THE DRIPLINE OF A TREE. NO SOIL IS PERMITTED ON THE ROOT FLARE OF ANY TREE.
7. PRUNING TO PROVIDE CLEARANCE FOR STRUCTURES, VEHICULAR TRAFFIC AND EQUIPMENT SHALL TAKE PLACE BEFORE CONSTRUCTION BEGINS.

CITY OF BELTON, TEXAS
DEPARTMENT OF PUBLIC WORKS

TREE PROTECTION WOOD SLATS

CONSTRUCTION STANDARDS AND DETAILS

D-26
SCALE: N.T.S.
ISSUE DATE: XXX

SECTION 3 – GENERAL UTILITIES

3.01 General

The purpose of this section is to define the general requirements for the design and construction of utility infrastructure. The City Engineer shall review all dry utilities on construction plans.

3.02 Dig Once Policy

All developments shall be required to construct and install two 3" conduits for telecommunication on all streets that are affected, disturbed, constructed and/or improved by development unless otherwise approved, pending a review by the City Engineer. These conduits shall be for the purpose of installing telecommunications cable, fiber optic wiring or other infrastructure as necessary.

These conduits shall be placed at horizontal and vertical locations as determined by the City Engineer. The conduits shall conform to the size, shape and characteristics as determined by the City Engineer based on industry standards. Once installed and accepted by the City, the conduits shall become the property of the City.

Development as defined in this section shall mean the construction of improvements such as buildings, homes, subdivisions, streets, and utilities.

3.03 Materials Requirements

A. Domestic Products
All iron, steel and manufactured components/materials used in any infrastructure project within the City of Belton or the City of Belton ETJ shall be manufactured in the United States of America. Proof of the manufacturer location shall be provided to the City Engineer prior to installation of components/materials. The City Engineer may waive this requirement when in the best interest of the City of Belton.

B. Concrete and Reinforcement Items
All concrete shall have a minimum 28-day compressive strength of 3,000 psi unless otherwise noted on the plans, specifications or other written document. Water shall not be added to the concrete after inspection and testing. Placed concrete shall be vibrated when necessary depending on slump, space available for concrete placement and depth of placement. The slump of concrete shall be placed at slumps per the Texas Department of Transportation Specifications for the Construction of Highways, Streets and Bridges under Item 420 with respect to the type of concrete structure being constructed.

Steel reinforcement shall be billeted conforming to ASTM specifications A615 Grade 60 or the latest revision to the ASTM A615 specification. Steel cover from the outside edge of steel to inside face of concrete. Reinforcement shall be adequately supported, spaced and secured before placing the concrete. The reinforcement support system (metal support chairs) shall be as manufactured by Dayton Superior, CHCP or CHCV, or equivalent and as noted in the details of the Transportation Section. Reinforcing steel shall be placed in accordance with ACI Standards with overlaps of 40 bar diameters. Rebar chairs shall be placed on 48 inch maximum spacing each way.

DRAFT

C. Hatches

All hatches shall be manufactured by Halliday Products and shall be series H1R (single leaf) or H2R (double leaf). All hatches shall be heavy duty, H-20 rated. All hatch openings shall be a minimum of 36”x36”, or as required by the City Engineer. Double leaf hatches (series H2R) shall be used for openings larger than 42”x42”. All hatches shall have a 1/4 inch (7mm) thick, aluminum diamond plate, one-piece, mill finish, extruded aluminum frame, incorporating a continuous concrete anchor. The inside of the frame shall have a door-support ledge on two (2) sides. Both frame and ledge must be supported by a full bed of Class A concrete. Doors shall open to 90 degrees and automatically lock in an open position with a T-316 stainless steel hold open arms with release handles. Doors shall also incorporate enclosed stainless steel compression spring assists. Doors shall close flush with the frame. Hinges and all fastening hardware shall be T-316 stainless steel. Unit shall lock with a T-316 stainless steel slam lock with removable keys and have a non-corrosive handle. The Halliday hatches shall be installed per the manufacturer’s recommendations.

DRAFT

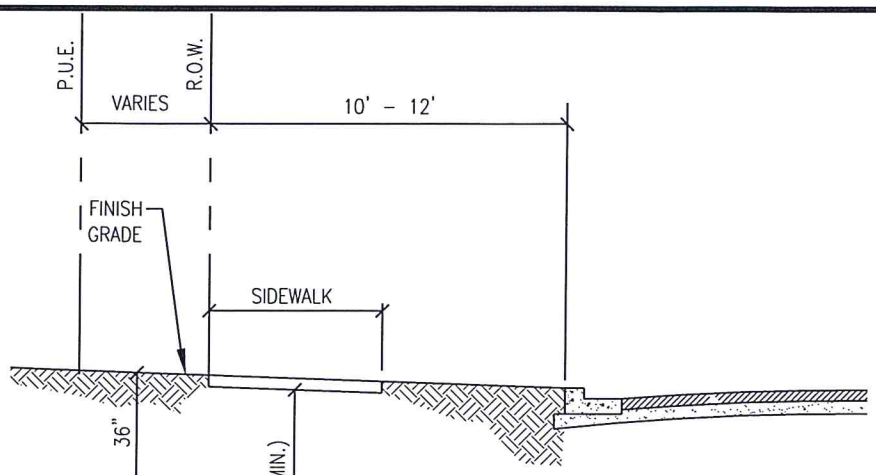

MINIMUM COVER BELOW FINISH-GRADE	
ELECTRIC PRIMARY	36"
ELECTRIC SECONDARY	24"
WATER	42"
WASTEWATER	42"
STORM SEWER	24"
GAS (SERVICE)	24"
GAS (MAIN)	36"
TELECOMMUNICATIONS	24"
COMMUNICATIONS CONDUIT	24"

* TO BE LOCATED BETWEEN SIDEWALK AND BACK OF CURB, SUBJECT TO APPROVAL BY CITY ENGINEER.

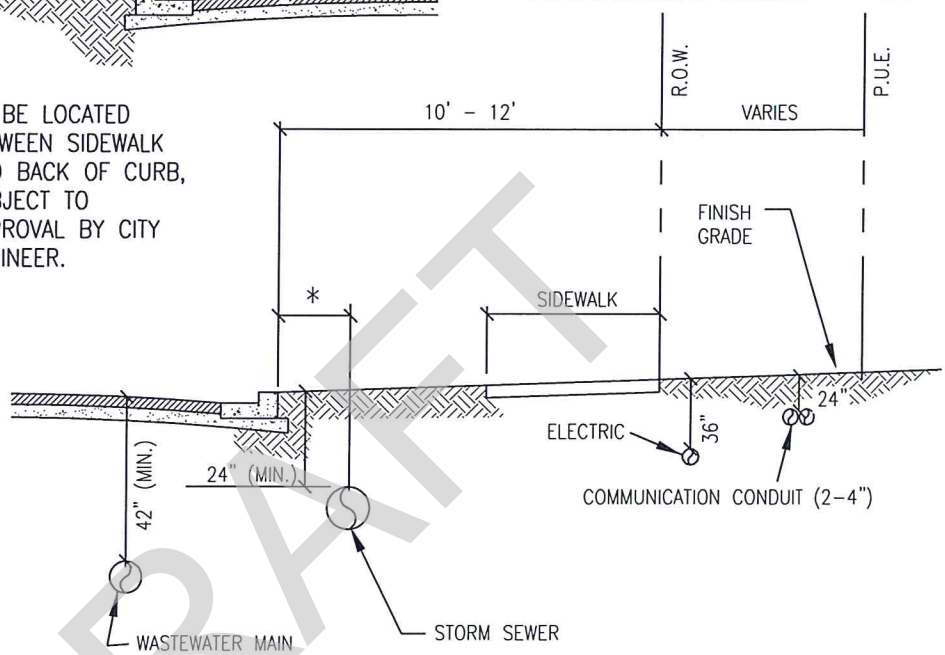

DRAFT

GENERAL NOTES:

1. THE CONTRACTOR SHALL VERIFY THE EXACT LOCATION AND ELEVATION OF ALL UTILITIES BEFORE ANY EXCAVATION BEGINS. THE CONTRACTOR SHALL ASSUME FULL RESPONSIBILITY FOR ANY DAMAGE TO UTILITIES.
2. THE CONTRACTOR SHALL CONTACT ALL LOCAL UTILITIES AND TEXAS 811 BEFORE COMMENCING ANY EXCAVATION OR DIGGING OPERATIONS.
3. BRACE UTILITY POLES AS REQUIRED TO MAINTAIN STABILITY OF THE POLES DURING CONSTRUCTION.
4. ALL INFRASTRUCTURE SHALL MEET TCEQ MINIMUM SEPARATION REQUIREMENTS.
5. WHEN USING JOINT TRENCH FOR ELECTRIC AND TELECOMMUNICATIONS, GAS MAIN SHALL BE LOCATED ON THE OPPOSITE SIDE OF THE STREET FROM THE JOINT TRENCH.
6. UTILITY ASSIGMENTS ARE TYPICAL AND VARIANCES ALLOWED AS APPROVED BY THE CITY ENGINEER.
7. INFRASTRUCTURE SHALL BE LOCATED AS CONSISTENTLY AS POSSIBLE WITHIN DEVELOPMENTS.
8. GAS/ELECTRIC/CABLE/TELECOMMUNICATIONS SHALL BE LOCATED IN P.U.E. INSTALL EMPTY, CAPPED COMMUNICATION CONDUIT IN P.U.E., WHICH WILL BE UTILIZED FOR FUTURE CABLE/TELECOMMUNICATION. PROVIDE 2-4" EMPTY PVC CONDUIT UNDER AND ACROSS ALL STREET INTERSECTIONS. PROVIDE A SITE PLAN OF CONDUIT SLEEVE PLACEMENT DURING PLAN REVIEWS.
9. SWEEPING CONDUIT BENDS WITH MINIMUM RADIUS OF 36" AT ALL CHANGES IN DIRECTION FOR COMMUNICATION CONDUIT.
10. SHARED TRENCHES SHALL BE USED FOR ALL TELECOMMUNICATIONS.

CITY OF BELTON, TEXAS
DEPARTMENT OF PUBLIC WORKS

TYPICAL UTILITY ASSIGNMENT FOR SIDEWALK AT PROPERTY LINE

CONSTRUCTION STANDARDS AND DETAILS

G-01
SCALE: N.T.S.
ISSUE DATE: XXX

NOTES:

1. SEWER EMBEDMENT SHALL BE 1" CRUSHED WASHED LIMESTONE UNLESS OTHERWISE NOTED.
2. ALL AGGREGATES SHALL BE CLEAN AND DURABLE PARTICLES OF NATURAL MATERIAL.
3. PIPE EMBEDMENT FOR WATER LINES SHALL BE MANUFACTURED SAND-WASHED AND FREE OF DEBRIS.
4. BEDDING MATERIAL SHALL BE PLACED AND CONSOLIDATED TO ELIMINATE VOIDS.
5. MANUFACTURERS RECOMMENDATIONS FOR BEDDING MATERIALS SHALL BE CONSIDERED WHERE STRUCTURAL INTEGRITY IS REQUIRED.
6. THE EXISTING PAVING SHALL BE SAW CUT IN A STRAIGHT LINE A MINIMUM OF 12" WIDER THAN THE UNDISTURBED SIDES OF THE TRENCH, SYMMETRICAL ABOUT THE CENTERLINE OF THE EXCAVATION, PRIOR TO TRENCHING.
7. IF EXCAVATION AREA IS OPEN FOR TEMPORARY PUBLIC USE, THE SURFACE SHALL BE MAINTAINED LEVEL WITH ADJACENT RIDING SURFACE WITH COLD MIX OR TEMPORARY HOT MIX ASPHALT.
8. ALL DAMAGED AREAS OF PAVEMENT RESULTING FROM CONTRACTOR'S OPERATIONS OUTSIDE THE TRENCH CUT SHALL BE REMOVED AND REPLACED WITH MINIMUM OF 8" OF ROAD BASE OR MATCH EXISTING THICKNESS, WHICHEVER IS GREATER. SURFACE PAVEMENT SHALL BE OF THE SAME KIND AND THICKNESS AS EXISTING.
9. TRENCH WIDTHS SHOWN ARE MINIMUM FOR PROPER PLACEMENT AND COMPACTION OF EMBEDMENT
10. THE MINIMUM CLEAR WIDTH OF TRENCH (SHEETED OR UNSHEETED) MEASURED AT SPRINGLINE OF PIPE SHALL BE 12" GREATER THAN THE OUTSIDE DIAMETER OF THE PIPE.
11. WHERE PIPE INSTALLATION IS IN ROCK (OR OTHER INCOMPRESSIBLE FOUNDATION), THE CONTRACTOR SHALL EXCAVATE SO AS TO PROVIDE A MINIMUM OF 8" GRANULAR CUSHION BENEATH THE PIPE.
12. INSTALLATION OF ANY PIPE WITHIN 4' OF THE BACK OF CURB OR EDGE OF STREET, SHALL REQUIRE THE SAME EMBEDMENT AS FOR INSTALLATION IN STREETS.
13. CONTRACTOR SHALL SHAPE EMBEDMENT MATERIAL TO ACCOMODATE THE BELLED JOINTS OF PIPES TO INSURE SUPPORT THROUGHOUT THEIR LENGTH. BELLED JOINTS SHALL HAVE A MINIMUM OF 4 INCHES OF FILL BENEATH THEM.
14. IF EXCAVATED MATERIAL IS NOT ACCEPTABLE TO THE ENGINEER FOR BACKFILL, CONTRACTOR WILL PROVIDE SELECT IMPORT MATERIAL AS REQUIRED.
15. FOR ROCK AND OTHER CONDITIONS NOT SPECIFIED HERE, REFER TO ENGINEER FOR BACKFILL DESIGN.
16. GREEN TAPE TO BE USED FOR WASTEWATER GRAVITY AND FORCE MAINS, BLUE TAPE TO BE USED FOR WATER MAINS. TAPE SHALL BE 12-INCHES WIDE, FULL BACK TYPE.
17. CRUSHER FINES ARE NOT ALLOWED FOR BEDDING.

DRAFT

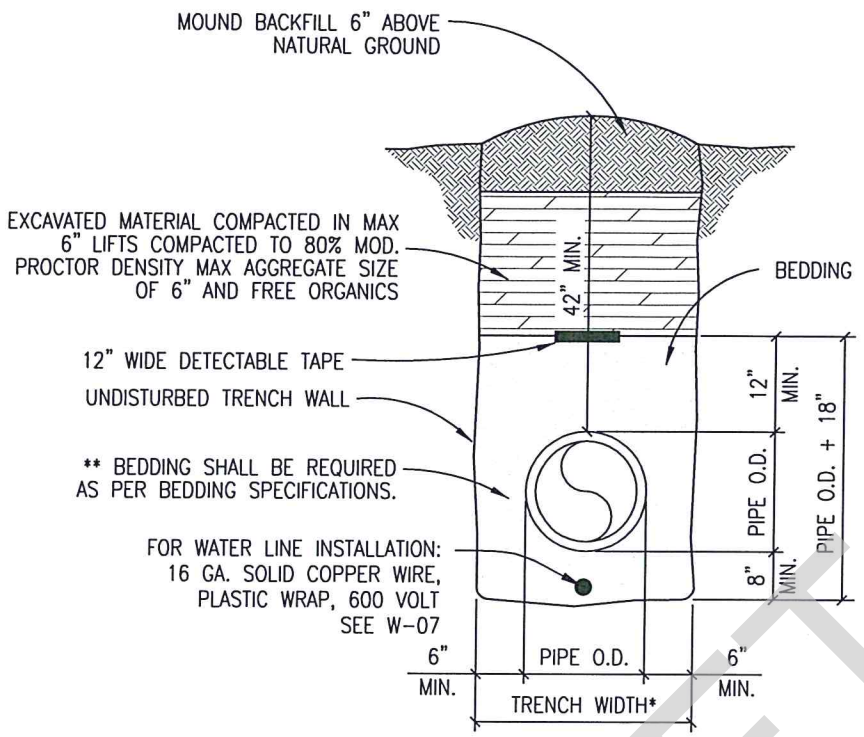

*TRENCH WIDTHS

PIPE LESS THAN 20" DIAMETER
1'-0" + PIPE O.D.

20" DIAMETER PIPE AND LARGER
2'-0" + PIPE O.D.

BEDDING MATERIAL SPECIFICATIONS:

1. ALL AGGREGATES SHALL BE CLEAN AND DURABLE PARTICLES OF NATURAL OR MANUFACTURED MATERIAL, AND SHALL BE 1 INCH CRUSHED STONE.
2. PIPE EMBEDMENT FOR WATER LINES SHALL BE SAND-WASHED AND FREE OF DEBRIS.
3. BEDDING MATERIAL SHALL BE PLACED AND CONSOLIDATED TO ELIMINATE VOIDS.
4. MANUFACTURERS RECOMMENDATIONS FOR BEDDING MATERIALS SHALL BE CONSIDERED WHERE STRUCTURAL INTEGRITY IS REQUIRED.

BEDDING SPECIFICATIONS OPTIONS

	PERCENT PASSING	
SIEVE	GRADE 1	GRADE 2
2"	100	100
1-1/2"	95-100	95-100
3/4"	35-70	60-90
3/8"	10-30	25-60
NO. 4	0-5	0-5

L.A. ABRASION
(ASTM C-131, GRADING "B")
PERCENT LOSS: 50 MAX.

(CONCRETE AGGREGATE)
GRADATION
(ASTM C33-SIZE 56)

NOTE:
WATER AND WASTEWATER LINES SHALL NOT BE LOCATED DEEPER THAN NECESSARY.

DRAFT

CITY OF BELTON, TEXAS
DEPARTMENT OF PUBLIC WORKS

EMBEDMENT AND BACKFILL OUTSIDE PAVED AREAS

CONSTRUCTION STANDARDS AND DETAILS

G-03
SCALE: N.T.S.
ISSUE DATE: XXX

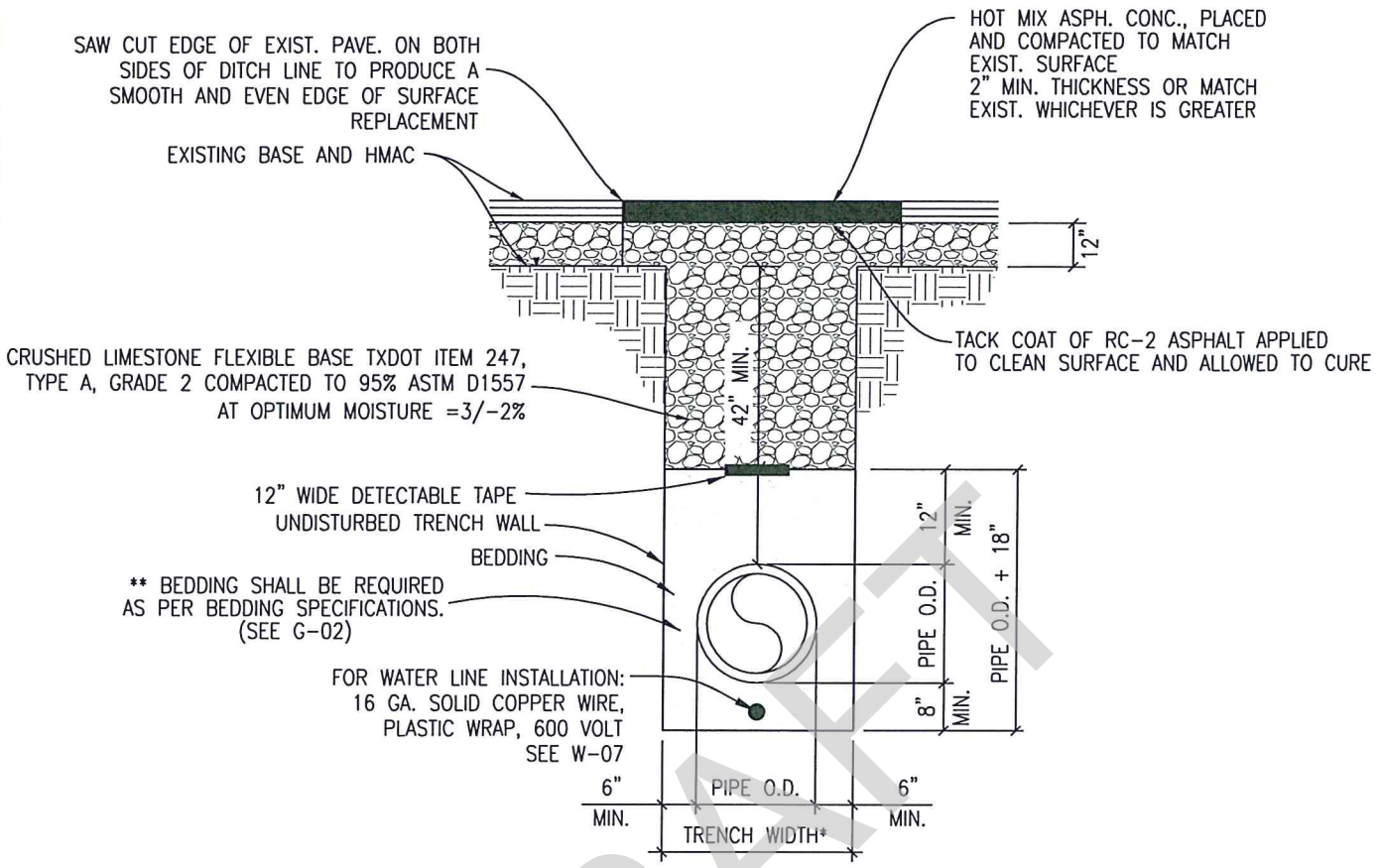

*TRENCH WIDTHS

PIPE LESS THAN 20" DIAMETER
1'-0" + PIPE O.D.

20" DIAMETER PIPE AND LARGER
2'-0" + PIPE O.D.

BEDDING MATERIAL SPECIFICATIONS:

1. ALL AGGREGATES SHALL BE CLEAN AND DURABLE PARTICLES OF NATURAL OR MANUFACTURED MATERIAL, AND SHALL BE 1 INCH CRUSHED STONE.
2. PIPE EMBEDMENT FOR WATER LINES SHALL BE SAND-WASHED AND FREE OF DEBRIS.
3. BEDDING MATERIAL SHALL BE PLACED AND CONSOLIDATED TO ELIMINATE VOIDS.
4. MANUFACTURERS RECOMMENDATIONS FOR BEDDING MATERIALS SHALL BE CONSIDERED WHERE STRUCTURAL INTEGRITY IS REQUIRED.

BEDDING SPECIFICATIONS OPTIONS

	PERCENT PASSING	
SIEVE	GRADE 1	GRADE 2
2"	100	100
1-1/2"	95-100	95-100
3/4"	35-70	60-90
3/8"	10-30	25-60
NO. 4	0-5	0-5

L.A. ABRASION
(ASTM C-131, GRADING "B")
PERCENT LOSS: 50 MAX.

(CONCRETE AGGREGATE)
GRADATION
(ASTM C33-SIZE 56)

DRAFT

CITY OF BELTON, TEXAS
DEPARTMENT OF PUBLIC WORKS

EMBEDMENT AND BACKFILL EXISTING OR FUTURE ROADWAY/PAVEMENT

CONSTRUCTION STANDARDS AND DETAILS

G-04
SCALE: N.T.S.
ISSUE DATE: XXX

NOTE:

1. WHERE 42" MINIMUM COVER CAN NOT BE OBTAINED OR DUE TO POTENTIAL SURFACE LOADING THE CITY MAY REQUIRE A CAP TO BE INSTALLED.
2. PIPES AND FITTINGS SHALL BE WRAPPED IN 8 MIL AWWA STAMPED POLY, WHERE CONCRETE IS PLACED.

*TRENCH WIDTH

PIPE LESS THAN 20" DIAMETER
1'-0" + PIPE O.D.
20" DIAMETER AND LARGER
2'-0" + PIPE O.D.

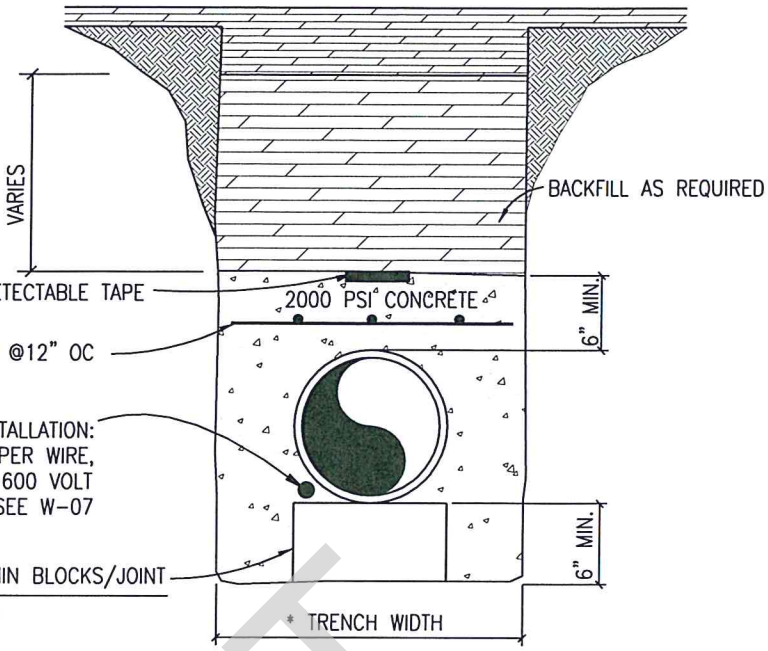

CONCRETE BLOCKS:

PIPE JOINT LENGTH	MIN BLOCKS/JOINT
≤ 14 FEET	2
> 14 FEET	3

CONCRETE ENCASEMENT

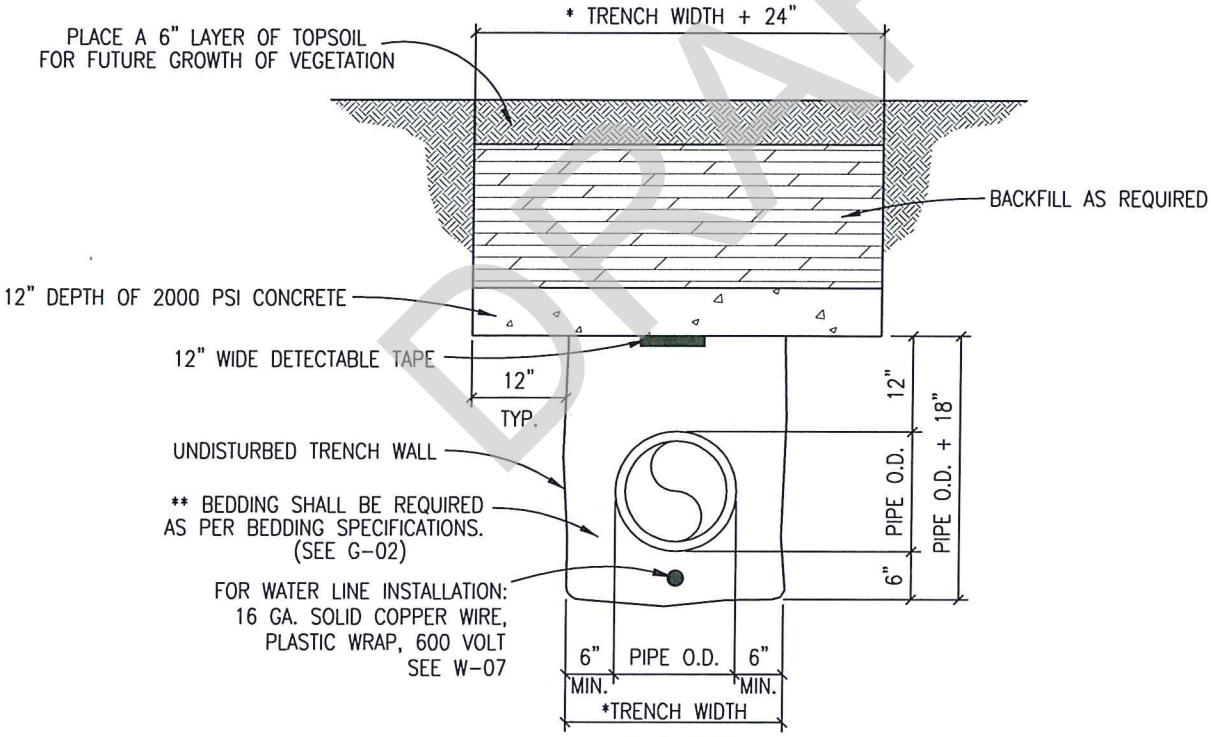

CONCRETE CAP

DRAFT

CITY OF BELTON, TEXAS

DEPARTMENT OF PUBLIC WORKS

CONCRETE CAP AND ENCASEMENT

CONSTRUCTION STANDARDS AND DETAILS

G-05
SCALE: N.T.S.
ISSUE DATE: XXX

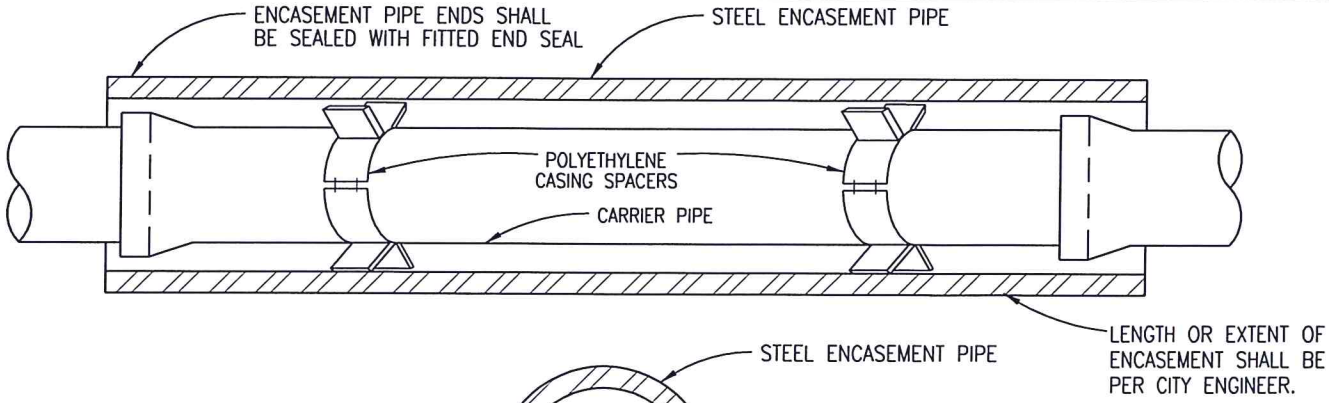

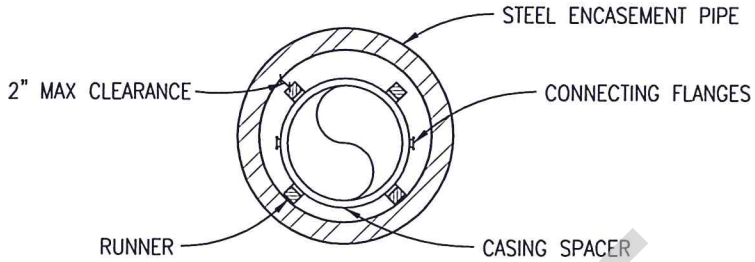

NOTES:

1. CASING SPACERS SHALL BE POLYETHYLENE CASING SPACERS AS MANUFACTURED BY RACI OR APPROVED EQUAL. CONNECTING FLANGES SHALL BE RIBBED FOR EXTRA STRENGTH.
2. ENDS OF THE ENCASEMENT PIPE WILL BE SEALED WITH FITTED END SEAL. END SEALS SHALL BE 1/8" THICK NEOPRENE RUBBER. ADVANCE PRODUCTS AND SYSTEMS, INC. MODEL AWN OR EQUAL.
3. CARRIER PIPE WITHIN STEEL ENCASEMENT PIPE SHALL BE RESTRAINED WITH BELL JOINT RESTRAINTS. GASKET LOCKS ARE AN ACCEPTABLE MEANS OF RESTRAINT FOR PIPELINES WITHIN STEEL ENCASEMENT PIPE.
4. DO NOT USE WEDGES BETWEEN TOP OF CARRIER PIPE AND INSIDE OF CASING TO KEEP CARRIER PIPE FROM MOVING.
5. PRIOR TO INSERTING CARRIER PIPE, ANY WATER SHOULD BE PUMPED OUT OF THE CASING PIPE SO THAT NO WATER REMAINS.
6. SPACERS WILL BE REQUIRED WITHIN AT LEAST 3 FEET FROM BOTH OPENINGS OF THE ENCASEMENT PIPE AND SPACED NO GREATER THAN 6 FEET THROUGHOUT THE ENCASEMENT PIPE.
7. CASING SPACERS WILL NOT BE PAID DIRECTLY BUT SHALL BE CONSIDERED SUBSIDIARY TO THE APPROPRIATE BID ITEM FOR INSTALLING PIPE.
8. ENCASEMENT PIPE SHALL BE SMOOTH STEEL 35,000 PSI YIELD STRENGTH WITH 1/4" MIN. WALL THICKNESS; 3/8" MIN. WALL THICKNESS WHEN CROSSING TxDOT ROADWAY; 1/2" MIN. WALL THICKNESS WHEN CROSSING RAILROAD.
9. SPIRAL WELD ENCASEMENT PIPE SHALL NOT BE USED.
10. MINIMUM COVER FOR CASING SHALL BE 42".

PIPE SIZE-CARRIER (DIAMETER)	PIPE SIZE-CASING (MINIMUM DIAMETER)	CASING (MINIMUM THICKNESS)
4"	10"	1/4"
6"	12"	1/4"
8"	16"	1/4"
10"	18"	1/4"
12"- 14"	24"	3/8"
16" - 18"	30"	1/2"
20" - 24"	36"	1/2"
30"	42"	1/2"

DRAFT

CITY OF BELTON, TEXAS
DEPARTMENT OF PUBLIC WORKS

INSTALLATION OF PIPE THROUGH CASING

CONSTRUCTION STANDARDS AND DETAILS

G-06
SCALE: N.T.S.
ISSUE DATE: XXX

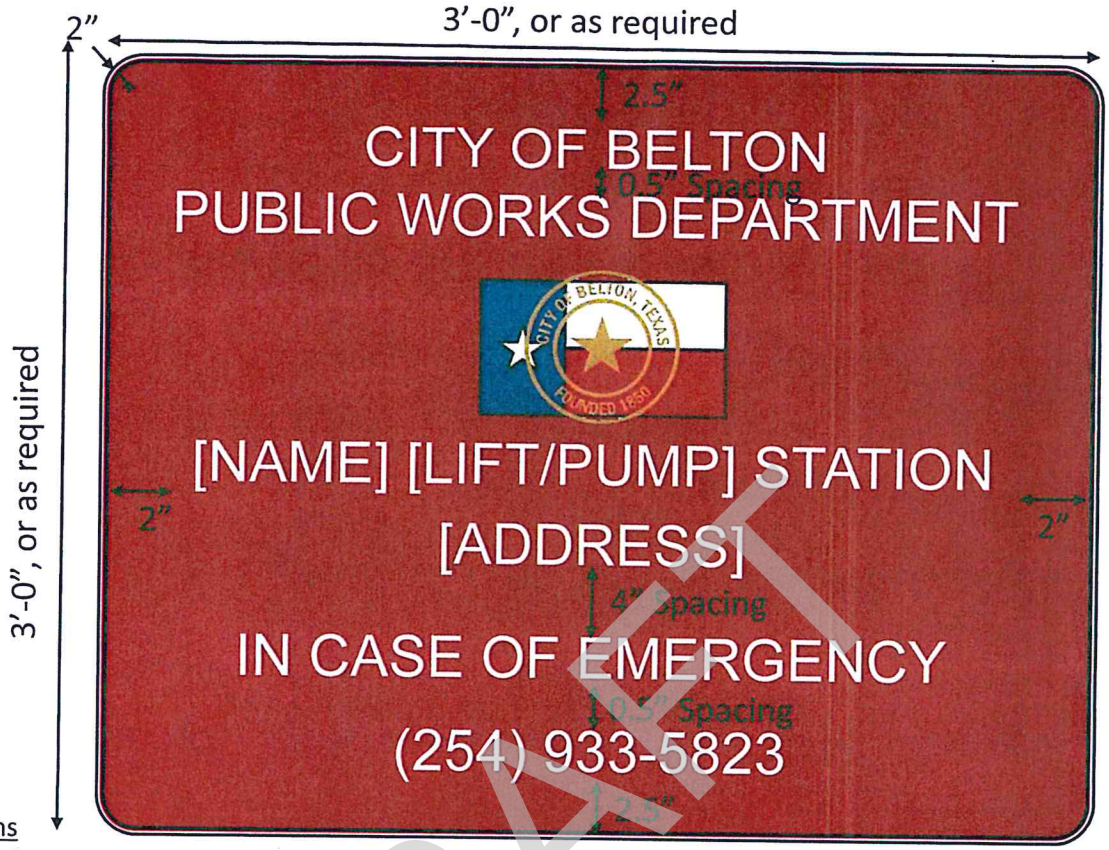

DRAFT

Specifications

1. Font: Helvetica
2. Letter Height: 3 inches
3. Material: Aluminum, 0.080 gauge
4. Reflectivity: Engineer-Grade
5. Sign shall be affixed to security fence using stainless steel hardware and shall meet TCEQ Chapter 217 requirements.
6. Fencing shall be per the Design Guidelines and in adherence with TCEQ Chapter 217 requirements.

NOTE:

SIGN SHALL BE AFFIXED TO SECURITY FENCE AND VISIBLE TO THE PUBLIC IN ACCORDANCE WITH TCEQ REQUIREMENTS WITH STAINLESS STEEL HARDWARE.

CITY OF BELTON, TEXAS
DEPARTMENT OF PUBLIC WORKS

LIFT STATION/PUMP STATION SIGNAGE

CONSTRUCTION STANDARDS AND DETAILS

G-07
SCALE: N.T.S.
ISSUE DATE: XXX

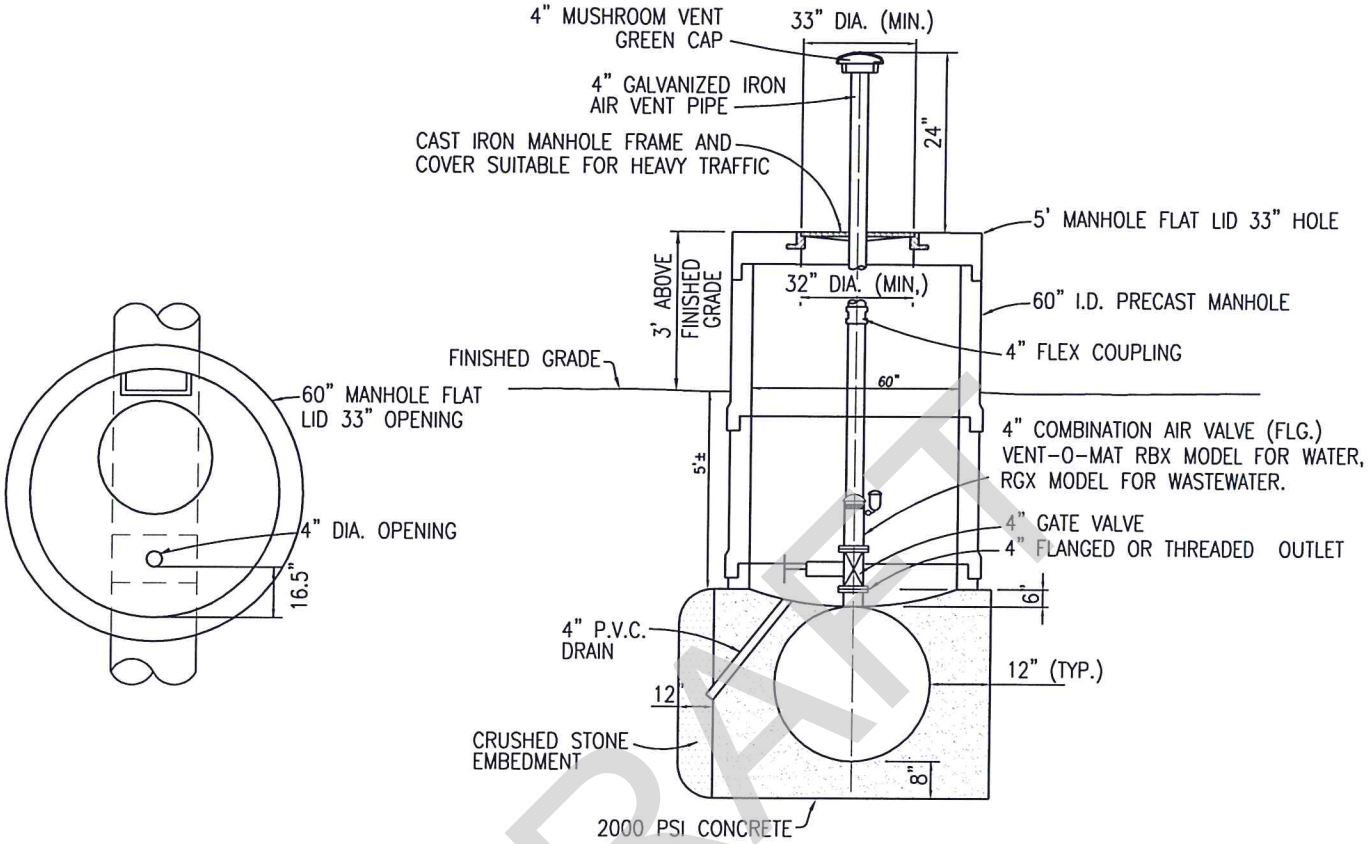

DRAFT

NOTES:

1. MANHOLES SHALL BE CAST IN PLACE OR PRECAST. ALL MANHOLES SHALL BE WATER TIGHT. PRECAST MANHOLES SHALL HAVE JOINTS SEALED WITH ALL RING.
2. ALL PIPE OPENINGS IN MANHOLES SHALL INCLUDE COUPLINGS WITH "O" RING RUBBER GASKETS.
3. SEAL PENETRATION IN MANHOLE FOR PIPING UTILIZING RAM NECK, SYNCHOFLEX AND NON-SHRINK GROUT.
4. PLACE 2000 P.S.I. GROUT AROUND VALVE OPENING ABOVE MANHOLE. EXTEND GROUT A MINIMUM OF 6 INCHES ALL AROUND.
5. VALVE BOX SHALL BE CUT OFF AT INSIDE FACE OF PRECAST MANHOLE.
6. AIR AND VACUUM RELEASE VALVE SHALL BE INSTALLED AS REQUIRED AND PER THE CITY ENGINEER.

CITY OF BELTON, TEXAS
DEPARTMENT OF PUBLIC WORKS

AIR AND VACUUM RELEASE VALVE

CONSTRUCTION STANDARDS AND DETAILS

G-08
SCALE: N.T.S.
ISSUE DATE: XXX

SECTION 4 - WATER

4.01 General

The purpose of this section is to define the general requirements for the design and construction of potable water infrastructure and to provide typical construction details for the improvements. The City of Belton Public Works Department should be consulted if variations from these standards are anticipated.

4.02 Master Plan

All potable water infrastructure design must be sized and located according to the land uses projected in the Comprehensive Plan and/or Thoroughfare Plan. Also, the City of Belton periodically updates the Water Master Plan which should be followed and adhered to during the design process.

4.03 Water Improvements

The subdivider shall provide all water lines required to properly serve each lot of the subdivision and to ensure that existing and/or new water facilities can supply the required demand at the desired pressure for both domestic use and for fire protection. The subdivider shall bear all costs for extending water service from existing City water lines that have sufficient capacity to serve the subdivision. All water lines and service connections shall conform to the current City Design Manual, requirements of the Texas Commission on Environmental Quality, and the fire insurance standards of the State Board of Insurance.

A. Design Standards

1. Piping for water mains and connections shall be in accordance with current City Design Manual and Texas Commission on Environmental Quality Regulations (Texas Administrative Code Title 30, Part 1, Chapter 290). All pipe and fittings shall be new and shall conform to the current standards of the American Water Works Association.

2. Water connections shall be made readily available to proposed park sites with water lines located along the street frontage of the park. The subdivider must demonstrate that there is sufficient water line capacity available to serve the park.

3. All water mains shall extend to the border of the proposed subdivision property lines. A valve, plug and concrete block shall be provided on the end of each said main such that an extension of the main can be made without removing said main from service. All service lines shall be extended to lot lines.

4. Water lines shall be at least eight (8) inches in diameter and shall be designed to serve the anticipated and future development including fire demand. Larger lines shall be required when required by the City. The subdivider may be required to upsize proposed water lines and water utility facilities as directed by the City Engineer, with the City cost participating in the said upsizing.

DRAFT

5. At the intersection of water distribution lines, the number of valves shall be one less than the number of radiating lines [two (2) valves for tee connections and three (3) for cross connections]. Valves shall be located at street intersections, the Point of Curve (PC), or the Point of Tangency (PT) of the nearest property line. Valves shall be provided on all water mains so that not more than 1,000-feet of main must be removed from service at one time for repairs. All valves shall conform to the current standards of the American Water Works Association. Valve locations shall be marked in accordance with the Curb Stamp Standard Detail in the Transportation Section.

6. All water lines shall have a minimum slope of 0.10%.

7. All water pipe shall have minimum cover of 42 inches, unless otherwise approved by the City Engineer.

8. Water line installation shall include tracer wire in accordance with the General Details for water and wastewater.

9. Each subdivision or phase of a subdivision shall install a sampling station to be provided and paid for by the Developer. The location of the sampling station shall be at the recommendation of the City Engineer. Where a subdivision or phase of a subdivision has in excess of 100 lots, additional sampling stations will be required, and the quantity and location of such to be determined by the City Engineer. Sampling stations shall be manufactured by Kordeen, Model 0001-3, furnished by the Developer and shall be in accordance with the latest regulations of the TCEQ and the City of Belton.

10. Separation distances between water and wastewater infrastructure shall be in accordance with TCEQ Regulations (Chapters 217 and 290). Where encasement is required, steel casing shall be in accordance with the detail included in the General Utilities section.

11. Where dead-end water lines are unavoidable, autoflush assemblies are required.

B. Materials and Sizing

1. All materials used in water improvement projects shall be North American domestic and comply with the American Water Works Association (AWWA). The following are general requirements for water mains as to materials and types.

2. All water mains shall have cast or ductile iron outside diameters and conform to the following material specifications:

   a) 2” pipe or less shall be PVC DR-21 with ring-tite seal. 3” pipe is not allowed.

   b) Pipe 4” to 12” shall be PVC, AWWA C900 DR-18 with ring-tite seal.

   c) Pipe Larger than 12” shall be Ductile Iron Pressure Class 250. Ductile iron pipe must:
      i. Meet or exceed AWWA specifications C150/A21.5 & C151/A21.51;

DRAFT

ii. Contain bell & spigot joints with a single rubber gasket, meeting or exceeding AWWA specifications CIII/A21.11;
iii. Meet or exceed thickness AWWA C150/A21.50 and C151/A21.51;
iv. Fittings shall be in accordance with C110 & C153; and
v. All buried ductile iron pipe and fittings shall be wrapped with 8 mil, Type I, Grade E-1, polyethylene film according to AWWA C105/A21.50.

3. Potable water lines shall be blue in color. Re-use/reclaimed water lines shall be purple in color in accordance with TCEQ Chapter 210.

4. Tapping sleeve & valve:
Tapping sleeve to meet AWWA specifications with a minimum working pressure of 150 PSI. Tapping valves shall meet AWWA specifications with a minimum working pressure of 175 PSI.

5. Bends & Fittings:
All bends and fittings shall be equipped with a mechanical joint restraint system in the flange/gland. All bends and fittings will be cast iron mechanical joint 2" or larger (C.I.M.J.) meeting the specifications of ANSI/AWWA C-110-77.

6. Pressure Reducing Valves (PRV), if necessary, shall be Cla-Val or approved equivalent. PRV Assemblies shall include a bypass with isolation valves. PRV(s) sizing shall consider flow rate(s) for both initial and ultimate conditions.

7. All water services shall be polyethylene tubing unless otherwise approved by the City Engineer.

8. Backflow Prevention shall be in accordance with TCEQ Section 290.44. Backflow devices shall be installed, certified and tested by a licensed backflow inspector.

9. Irrigation lines shall be installed perpendicular to ROW.

DRAFT

4.04 Testing and Disinfection of Water Mains

A. Testing of installed improvements shall meet all TCEQ and AWWA C651 specifications and regulations for Disinfecting Water Mains. Samples shall be sent to a City-approved laboratory, and a copy of the results shall be sent to the City Engineer.

All water lines shall be complete in place including all bends, blocking, fittings, restraints, services, and appurtenances before pressure testing. New water line shall not be placed into service until pressure testing and bacteriological testing has been completed.

Pressure test will be completed in a manner that is against all new valves.

All original reports shall be provided to the City Engineer.

4.05 Construction Drawings

Construction drawings for water line installation shall contain both plan and profile view labeled with percent slopes, flowline elevations (based on mean sea level elevations) at horizontal and

vertical PI's, horizontal dimensioning to easement and/or property line, and vertical dimensioning at critical crossings.

DRAFT

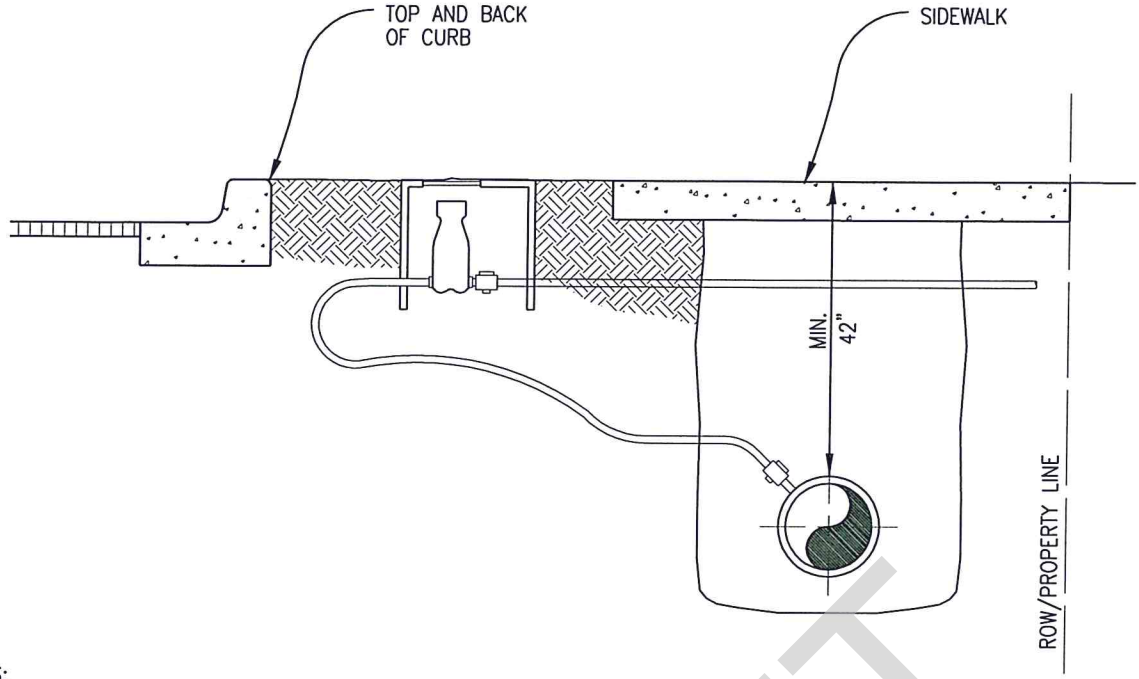

NOTES:

1. SUCCESSIVE TAPS INTO THE WATER MAIN SHALL BE SPACED A MINIMUM OF 5-FEET OFFSET.
2. METER BOXES SHALL BE SET 1-3 INCHES ABOVE FINAL LANDSCAPED GRADE.
3. SERVICE LINE MATERIAL SHALL BE SDR-9. CLASS 200 POLYETHYLENE TUBING, PER SHEET W-02.
4. SERVICE LINES SHALL BE CONTINUOUS FROM CORPORATION STOP TO ANGLE STOP WITH NO FITTINGS IN BETWEEN.
5. SERVICE CASING SHALL NOT BE INSTALLED BY WATER JETTING UNDER ROADWAY.
6. METER BOX COVER TO BE CAPABLE OF HOUSING IRON AUTOMATIC METER READING DEVICE.
7. SERVICE LINES SUPPORTING 2 METERS SHALL BE A MINIMUM OF 1 1/2 INCHES.
8. SERVICE LINES FOR A SINGLE METER SHALL BE A MINIMUM OF 1 INCH.
9. METERS SHALL BE PLACED IN THE STREET R.O.W., UNLESS OTHERWISE APPROVED BY CITY ENGINEER.
10. SERVICE LINES CROSSING STREET SHALL BE BURIED A MINIMUM OF 24" BELOW SUBGRADE
11. ALL BRASS SHALL BE LEAD FREE AND MANUFACTURED BY MUELLER OR FORD.
12. LONG SERVICES SHALL BE CASED IN A WHITE SCHEDULE 40 CONDUIT.
13. APPROVED METER BOXES SHALL BE PROVIDED TO THE CITY OF BELTON DEPARTMENT OF PUBLIC WORKS AT 1502 HOLLAND ROAD. PUBLIC WORKS STAFF WILL INSTALL METER, METER BOX.

DRAFT

CITY OF BELTON, TEXAS
DEPARTMENT OF PUBLIC WORKS

WATER SERVICE ELEVATION

CONSTRUCTION STANDARDS AND DETAILS

W-01
SCALE: N.T.S.
ISSUE DATE: XXX

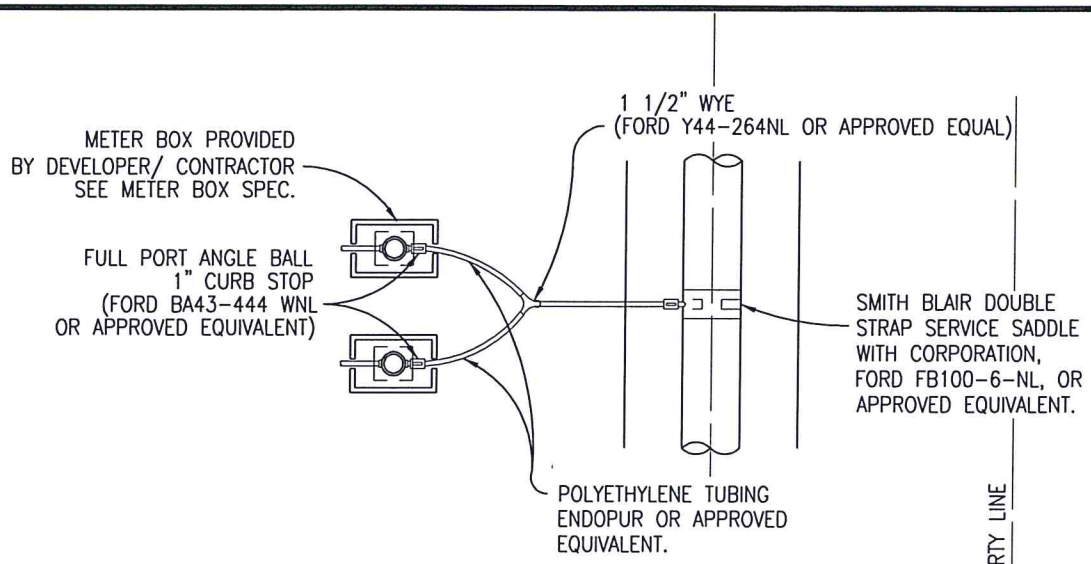

DOUBLE

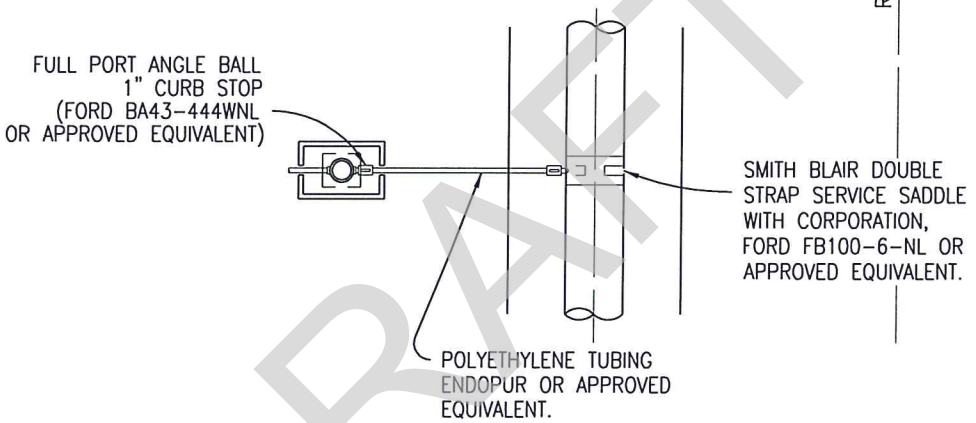

SINGLE

DRAFT

NOTES:

1. SERVICE LINE MATERIAL SHALL BE POLYETHYLENE TUBING SDR 9 CLASS 200.
2. ANGLE STOP SHALL BE 1-INCH MINIMUM FOR SINGLE SERVICE AND 1.5-INCH FOR DOUBLE SERVICE.
3. MULTIPLE SERVICE/METER INSTALLATIONS OF MORE THAN 2 METERS PER SERVICE AND SERVICE LINES SHALL BE A DOUBLE SERVICE.
4. ALL ANGLE STOPS SHALL BE PROVIDED WITH LOCK WING AND METER NUT.
5. ANGLE STOPS SHALL BE INSTALLED 8" BELOW FINISHED GRADE AND MARKED WITH A 2" X 2" X 48" TREATED WOOD STAKE, PAINTED BLUE.
6. THERE SHALL BE A 6" ENVELOPE OF BEDDING AROUND SERVICE PIPE.
7. ANY VARIATIONS ON FITTINGS MUST BE APPROVED BY CITY ENGINEER.
8. COMMON TAPS & METERS SHALL BE NO MORE THAN 2' FROM PROPERTY LINE – OR 2 TO 3 FEET FROM PROPERTY LINE.
9. SERVICES SHALL BE STAMPED WITH 'W' IN CURB.
10. SERVICE SADDLE SHALL BE INSTALLED AT 45° ANGLE.
11. ALL BRASS FITTINGS SHALL COMPLY WITH "NO LEAD" BRASS LAW (SDWA SECTION 1417(A)).
12. ENDOPUR TUBING SHALL BE WHITE INTERIOR, BLUE EXTERIOR, MADE WITH ALL VIRGIN MATERIALS.

CITY OF BELTON, TEXAS

DEPARTMENT OF PUBLIC WORKS

WATER SERVICE PLAN

CONSTRUCTION STANDARDS AND DETAILS

W-02
SCALE: N.T.S.
ISSUE DATE: XXX

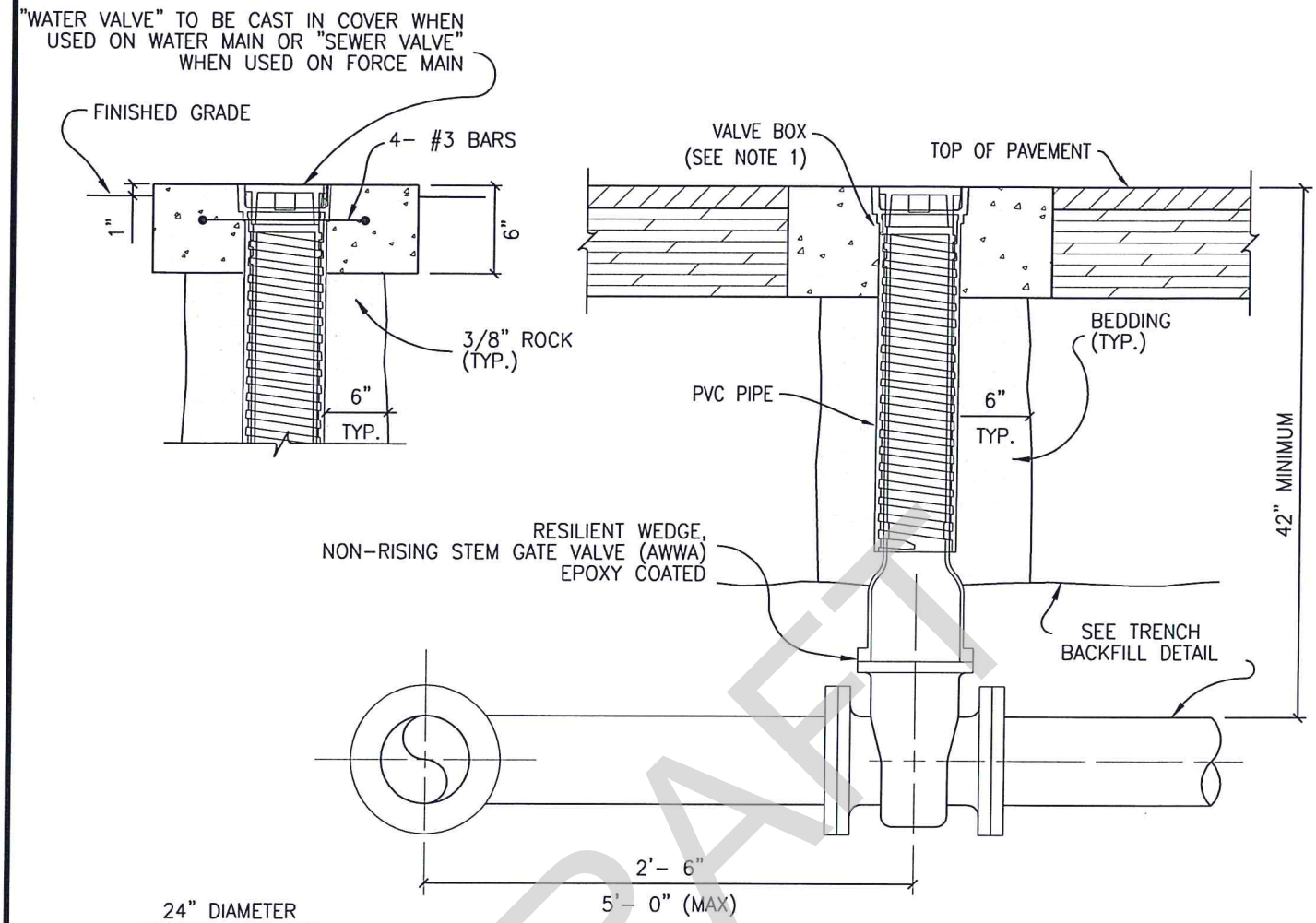

24" DIAMETER
CONCRETE COLLAR
6" THICK MINIMUM

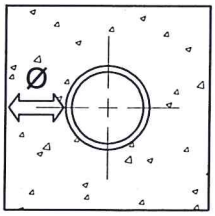

Ø - PIPE DIAMETER

⟺ - PIPE DIRECTION

TO BE ETCHED IN CONCRETE.

NOTES:

1. VALVE BOX AND EXTENSION SHALL BE EJ 8550, 6800 SET.
2. EXTENSION REQUIRED WHEN VALVE OPERATING NUT IS GREATER THAN 3' FROM VALVE BOX COVER. UNLESS OTHERWISE NOTED ON PLANS, VALVE BOX EXTENSIONS SHALL BE CONSTRUCTED OF PVC C900 OR D.I.P.
3. ALL FITTINGS SHALL BE WRAPPED IN 8 MIL AWWA STAMPED POLY, WHERE CONCRETE IS PLACED.
4. VALVE COLLARS LOCATED WITHIN THE ROADWAY SHALL BE 24"x24" SQUARE.
5. WHERE 2 OR MORE VALVES ARE LOCATED ADJACENT TO ONE ANOTHER, ONE LARGER VALVE COLLAR SHALL BE USED.

DRAFT

CITY OF BELTON, TEXAS
DEPARTMENT OF PUBLIC WORKS

VALVE SETTING

CONSTRUCTION STANDARDS AND DETAILS

W-03
SCALE: N.T.S.
ISSUE DATE: XXX

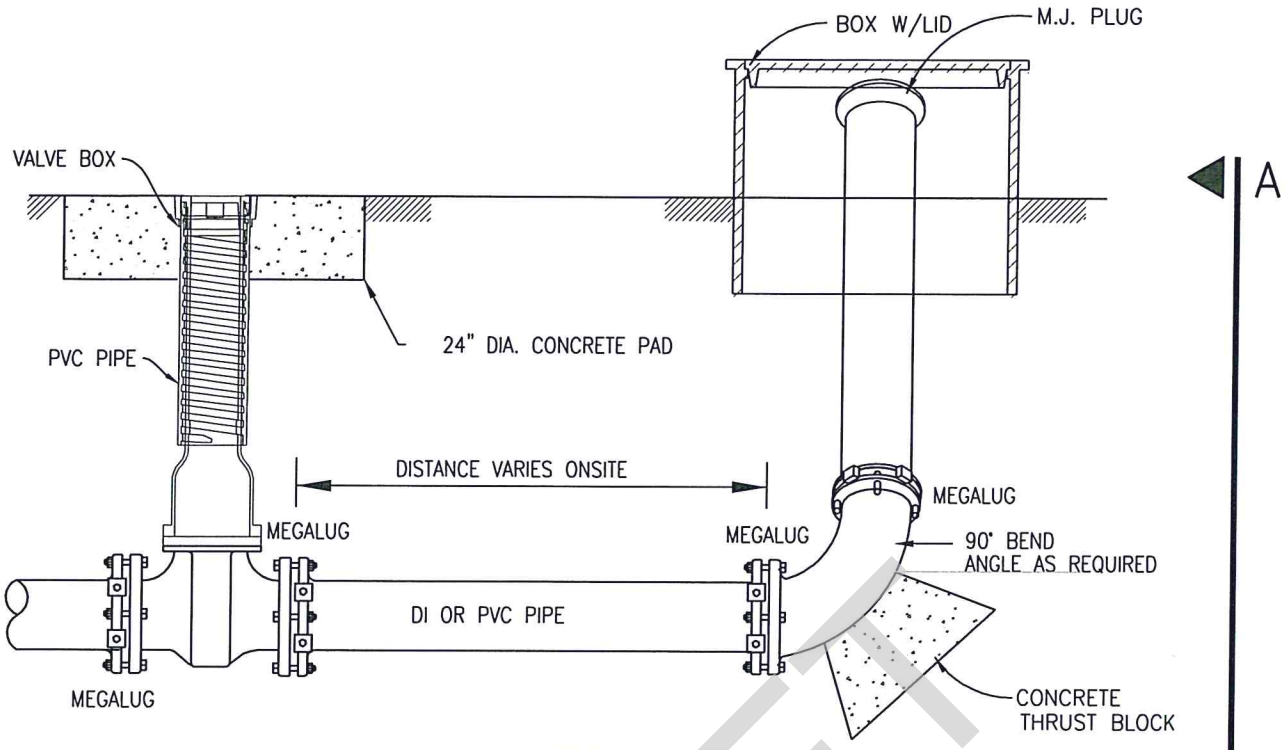

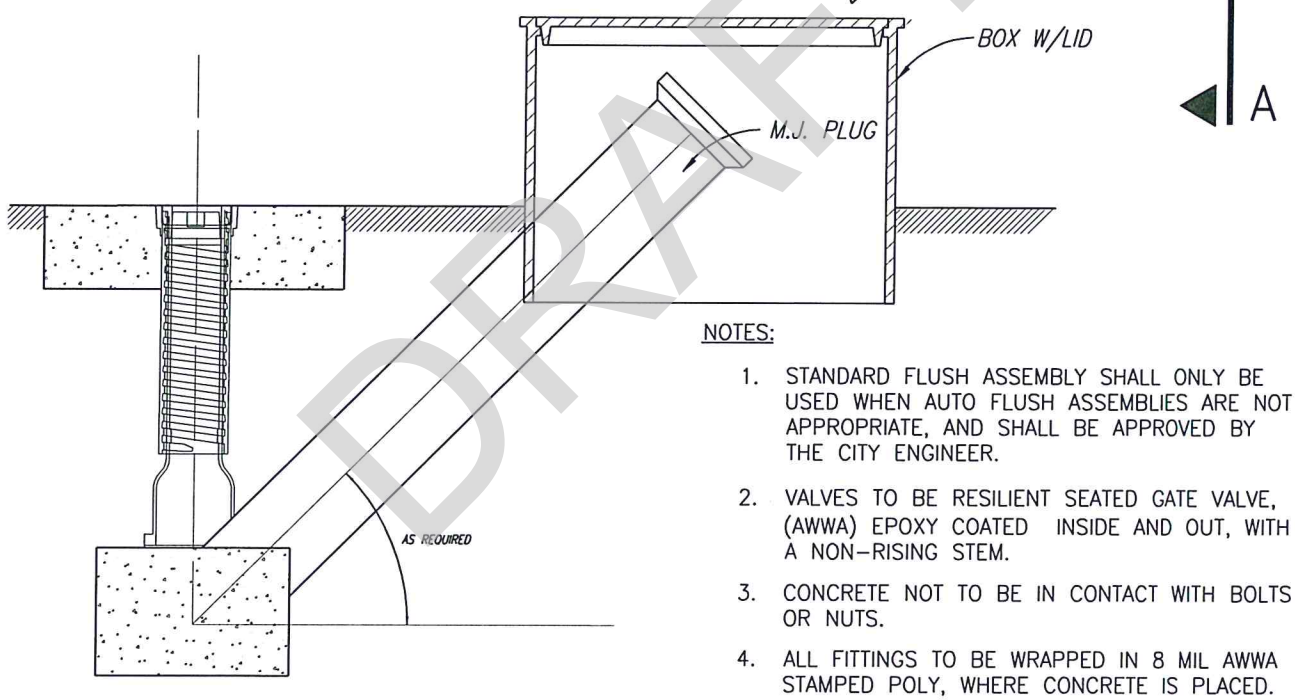

SECTION A–A

NOTES:

1. STANDARD FLUSH ASSEMBLY SHALL ONLY BE USED WHEN AUTO FLUSH ASSEMBLIES ARE NOT APPROPRIATE, AND SHALL BE APPROVED BY THE CITY ENGINEER.
2. VALVES TO BE RESILIENT SEATED GATE VALVE, (AWWA) EPOXY COATED INSIDE AND OUT, WITH A NON–RISING STEM.
3. CONCRETE NOT TO BE IN CONTACT WITH BOLTS OR NUTS.
4. ALL FITTINGS TO BE WRAPPED IN 8 MIL AWWA STAMPED POLY, WHERE CONCRETE IS PLACED.
5. 90° BEND SHALL BE RESTRAINED.
6. VALVE COLLARS LOCATED WITHIN THE ROADWAY SHALL BE 24"x24" SQUARE.
7. FLUSH ASSEMBLIES SHALL BE LOCATED AT ALL ENDS OF WATER LINES.

DRAFT

CITY OF BELTON, TEXAS
DEPARTMENT OF PUBLIC WORKS

STANDARD FLUSH ASSEMBLY

CONSTRUCTION STANDARDS AND DETAILS

W–04
SCALE: N.T.S.
ISSUE DATE: XXX

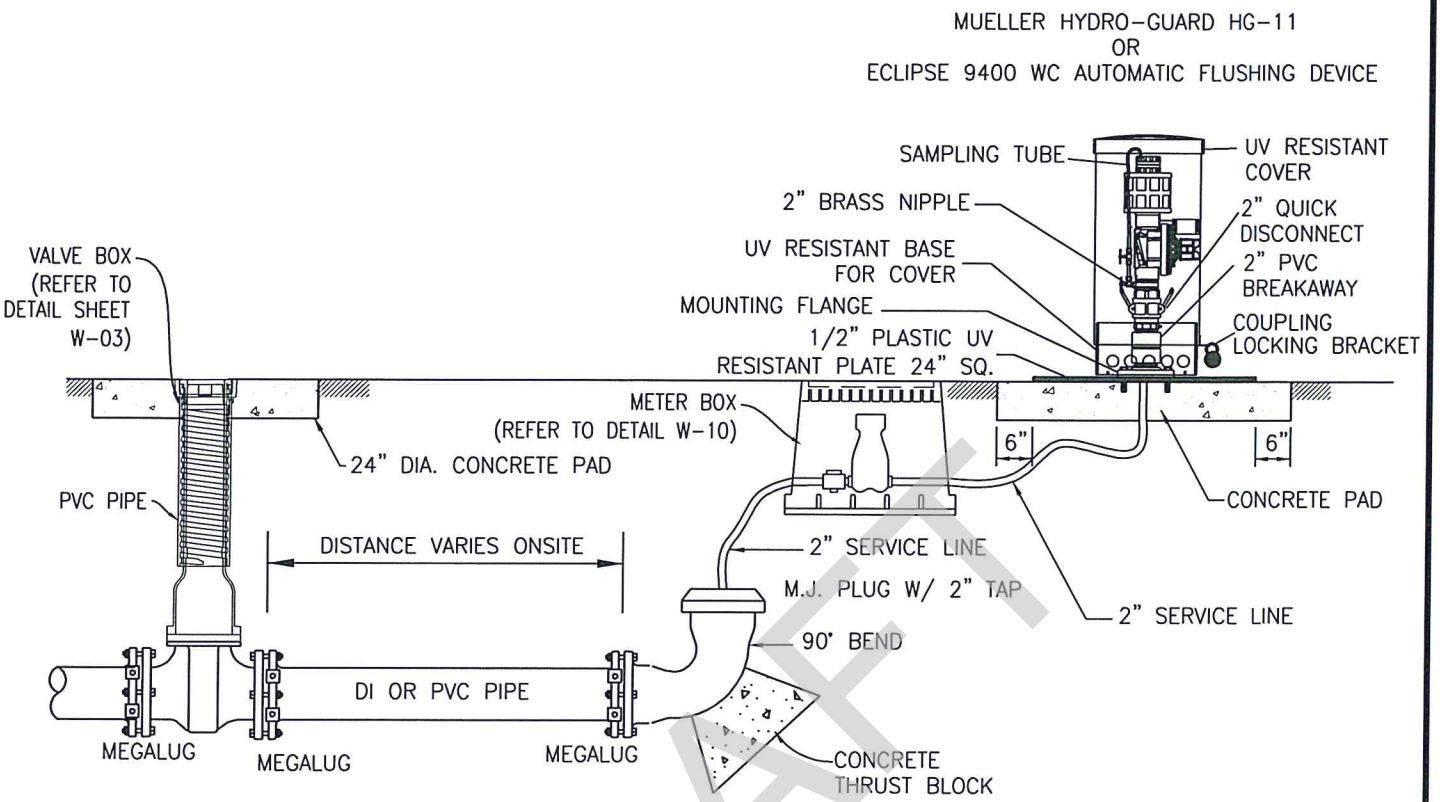

DRAFT

NOTES:

1. VALVES TO BE RESILIENT SEATED GATE VALVE, (AWWA) EPOXY COATED INSIDE AND OUT, WITH A NON-RISING STEM.
2. CONCRETE NOT TO BE IN CONTACT WITH BOLTS OR NUTS.
3. ALL FITTINGS TO BE WRAPPED IN 8 MIL AWWA STAMPED POLY, WHERE CONCRETE IS PLACED.
4. 90° BEND SHALL BE RESTRAINED.
5. VALVE COLLARS LOCATED WITHIN THE ROADWAY SHALL BE 24"x24" SQUARE.
6. FLUSH ASSEMBLIES SHALL BE INSTALLED WITH 3-FOOT CLEARANCE ON ALL SIDES.
7. APPROPRIATE EROSION CONTROL MEASURES SHALL BE PROVIDED FOR FLUSH ASSEMBLY DISCHARGE.
8. FLUSH ASSEMBLIES SHALL BE LOCATED AT ALL ENDS OF WATER LINES. FOR DEAD-END WATER MAINS IN CUL-DE-SAC, LOCATE FLUSH ASSEMBLY AT END OF THE CLU-DE-SAC BETWEEN BACK OF CURB AND R.O.W.

CITY OF BELTON, TEXAS
DEPARTMENT OF PUBLIC WORKS

AUTOMATIC FLUSH ASSEMBLY

CONSTRUCTION STANDARDS AND DETAILS

W-05
SCALE: N.T.S.
ISSUE DATE: XXX

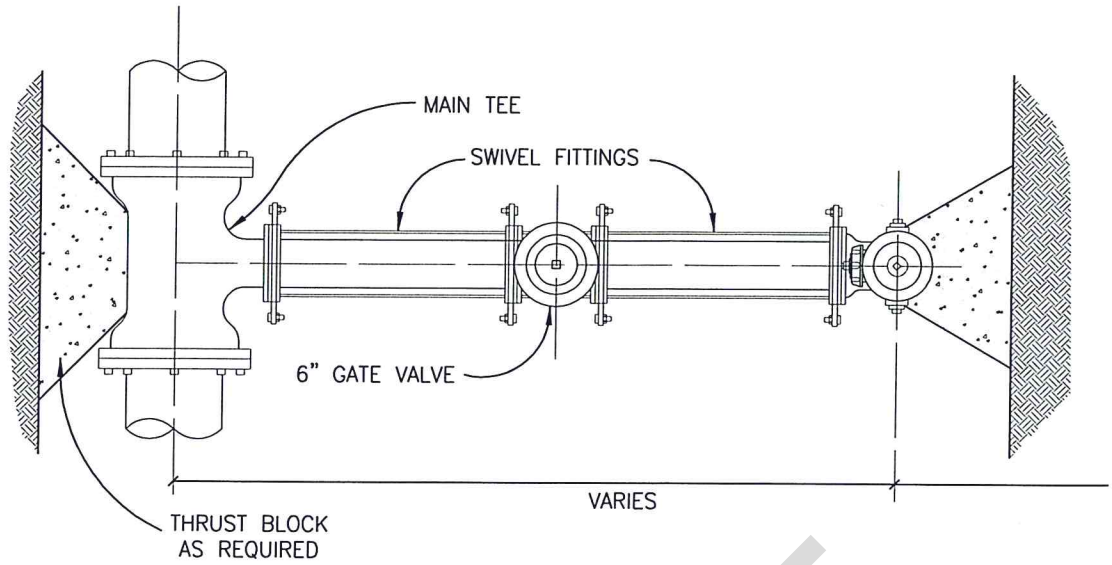

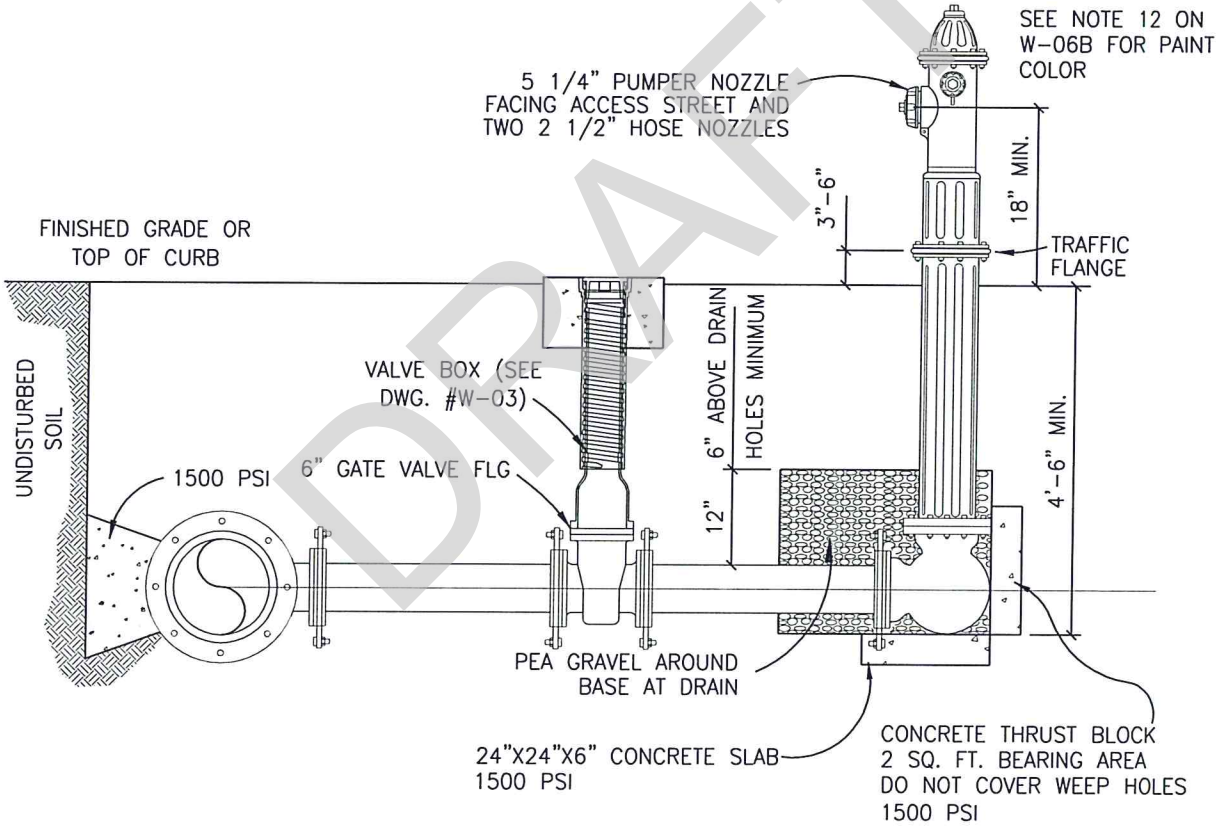

DRAFT

NOTE:

IF MORE THAN ONE PIPE JOINT IS NECESSARY FOR FIRE HYDRANT LEAD, LOCKING GASKETS ARE REQUIRED.

CITY OF BELTON, TEXAS

DEPARTMENT OF PUBLIC WORKS

FIRE HYDRANT INSTALLATION

CONSTRUCTION STANDARDS AND DETAILS

W-06A

SCALE: N.T.S.

ISSUE DATE: XXX

NOTES:

1. FIRE HYDRANT SHALL BE INSTALLED ON SAME SIDE OF ROAD AS WATER MAIN.
2. FIRE HYDRANT SHALL BE INSTALLED PLUMB AND TRUE.
3. HEEL AND THRUST BLOCKS TO REST IN UNDISTURBED SOIL.
4. FIRE HYDRANTS SHALL BE MUELLER SUPER CENTURION MODEL 250 OR M&H MODEL B-29.
5. FIRE LINE SHALL HAVE JOINT RESTRAINT FROM MAIN TO HYDRANT.
6. PEA GRAVEL SHALL BE PLACED AROUND THE BOTTOM OF THE HYDRANT FOR A RADIUS OF AT LEAST 12", AND EXTEND AT LEAST 12" ABOVE THE OUTLET. DO NOT BLOCK DRAIN HOLES.
7. VALVE EXTENSIONS SHALL BE PLACED SUCH THAT THE OPERATING NUT IS NO MORE THAN 3'-0" FROM FINISHED GRADE.
8. FOR BURY DEPTHS GREATER THAN FIVE (5) FEET, ONE BARREL EXTENSION SHALL BE PROPERLY PLACED.
9. CONCRETE SHALL NOT BE IN CONTACT WITH BOLTS OR NUTS.
10. ALL FITTINGS AND HYDRANT BOOT SHALL BE WRAPPED IN 8 MIL AWWA STAMPED POLY, WHERE CONCRETE IS PLACED.
11. FIRE HYDRANT SHALL BE INSTALLED ACCORDING TO MANUFACTURER'S RECOMMENDATIONS.
12. FIRE HYDRANT SHALL BE FACTORY PAINTED FLYNT ALUMINUM FOR NOZZLE SECTION AND RUST PRIMER FOR BONNET.
13. FOR PARALLEL ASSEMBLY, ANCHOR 90 SHALL BE USED BETWEEN VALVE AND HYDRANT.
14. FIRE HYDRANT SHALL BE LOCATED 3-FEET TO 10-FEET BEHIND THE CURB, WITHIN R.O.W., AND COMPLY WITH CURRENT APPROVED FIRE CODE.
15. CONTRACTOR SHALL INCLUDE RISER EXTENSION AND ITS INSTALLATION IN THE BID AS NECESSARY TO ACHIEVE THE SHOWN CONFIGURATION.
16. FIRE HYDRANT REFLECTIVE MARKERS AND FLAGS SHALL BE INSTALLED WHEN HYDRANT IS MORE THAN 50 FEET FROM STREET CURB/EDGE OF PAVEMENT OR WHEN HYDRANT IS INSTALLED BELOW ROAD GRADE.
17. FIRE HYDRANTS SHALL BE INSTALLED AT ALL STREET INTERSECTIONS AND AT THE BEGINNING OF EACH CUL-DE-SAC RADIUS.

DRAFT

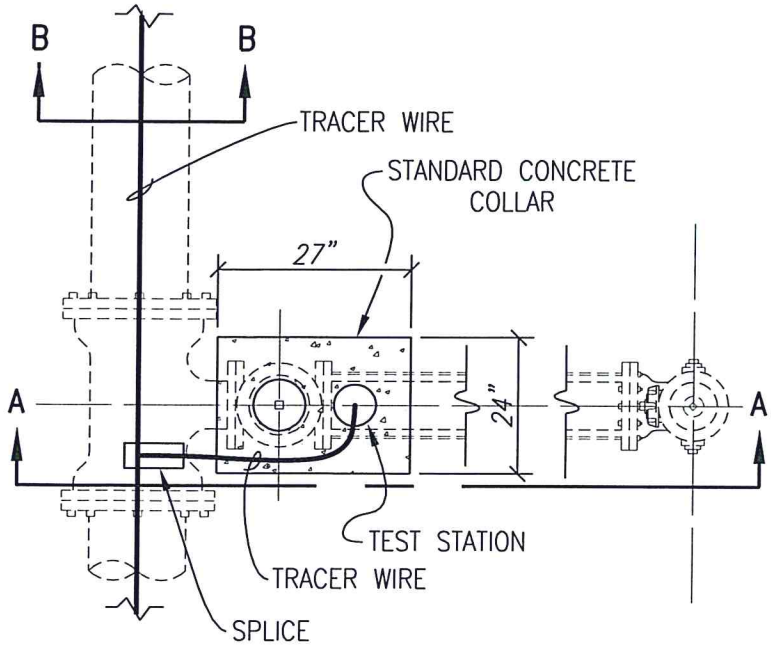

PLAN

NOTES:

1. TEST STATION SHALL BE HANDLEY INDUSTRIES INC. – 2 INCH CATHODIC TEST STATIONS OR APPROVED EQUAL.
2. THE 15" ABS PLASTIC BOX SHALL BE A FLANGED TOP FOR INSTALLATION AT GROUND LEVEL.
3. ALL TERMINALS ARE TO BE MADE OF SOLID BRASS.
4. PLASTIC LIDS SHALL BE COLOR BLUE AND MARKED "WATER".
5. TEST TERMINALS ARE TO BE INCORPORATED WITH HANDLEY VALVE BOXES.
6. BURY SPLICE SHALL BE 3M DIRECT BURY SPLICE (DBR) OR APPROVED EQUAL.
7. TEST STATIONS SHALL BE INSTALLED AT EACH FIRE HYDRANT LOCATION.
8. TRACER WIRE SHALL NOT BE PLACED MORE THAN 6-FEET DEEP.

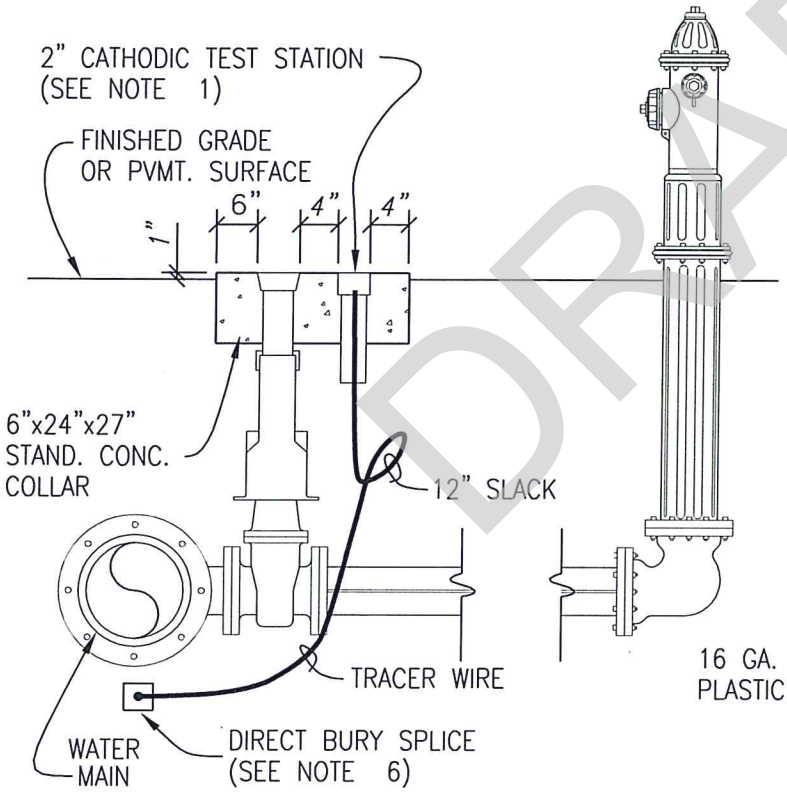

SECTION A-A

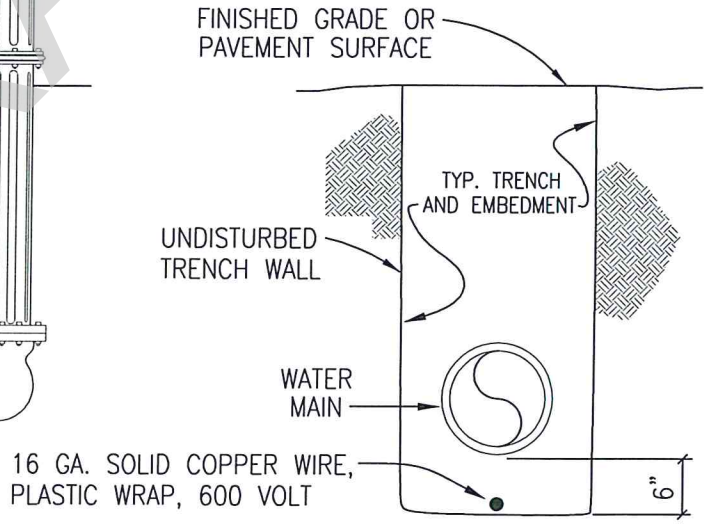

SECTION B-B

DRAFT

CITY OF BELTON, TEXAS
DEPARTMENT OF PUBLIC WORKS

TRACER WIRE

CONSTRUCTION STANDARDS AND DETAILS

W-07
SCALE: N.T.S.
ISSUE DATE: XXX

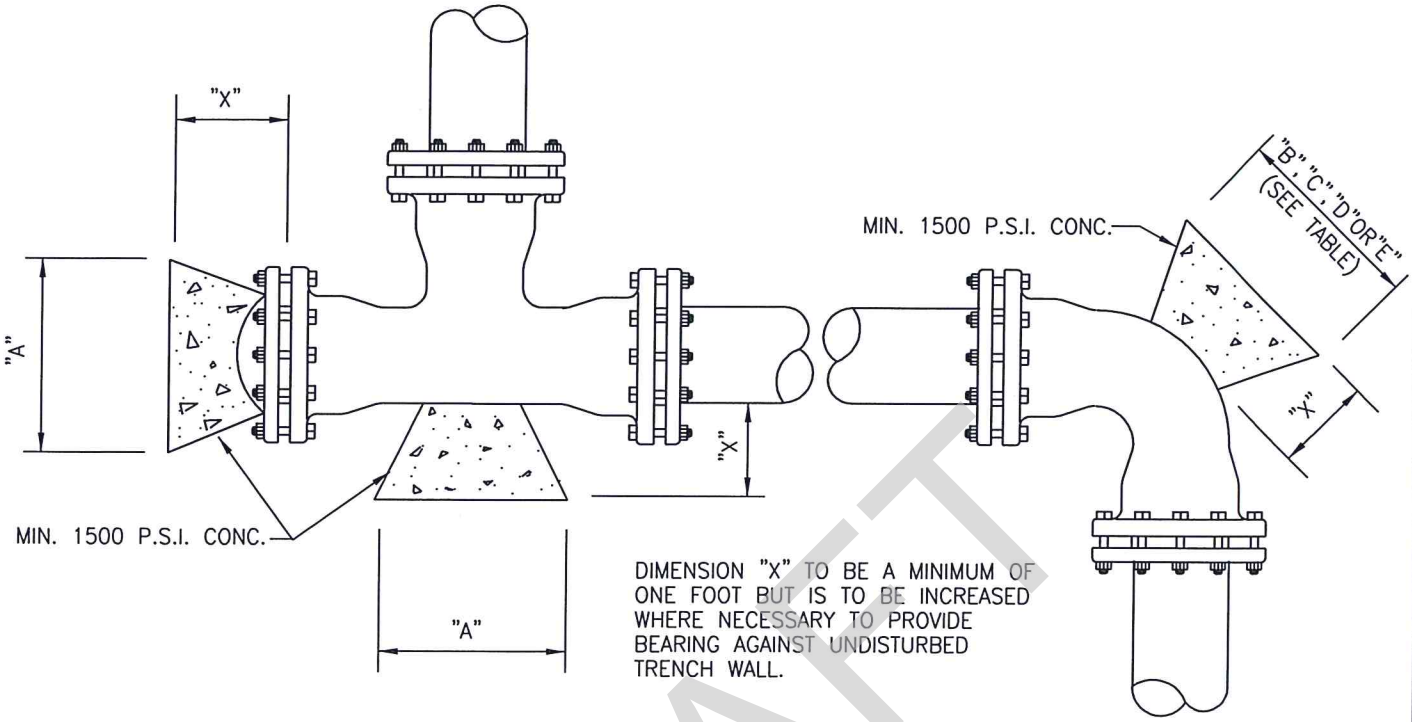

DIMENSION "X" TO BE A MINIMUM OF ONE FOOT BUT IS TO BE INCREASED WHERE NECESSARY TO PROVIDE BEARING AGAINST UNDISTURBED TRENCH WALL.

HORIZONTAL BLOCKING TABLE

PIPE SIZE	"X" DIM.	PLUGS & TEES			90° BENDS			45° BENDS			22 1/2° BENDS			11 1/4° BENDS		
		"A"	MIN. AREA	MAX. VOL.	"B"	MIN. AREA	MAX. VOL.	"C"	MIN. AREA	MAX. VOL.	"D"	MIN. AREA	MAX. VOL.	"E"	MIN. AREA	MAX. VOL.
4"	1'-0"	1'-0"	.83	.05	1'-0"	.83	.05	1'-0"	.83	.05	1'-0"	.83	.05	1'-0"	.83	.05
6"	1'-6"	1'-0"	1.06	.06	1'-2"	1.50	.09	1'-0"	.83	.05	1'-0"	.83	.05	1'-0"	.83	.05
8"	1'-6"	1'-3"	1.89	.11	1'-6"	2.66	.15	1'-3"	1.44	.08	1'-0"	.83	.05	1'-0"	.83	.05
10"	1'-6"	1'-9"	2.95	.17	2'-0"	4.17	.24	1'-6"	2.26	.13	1'-3"	1.15	.07	1'-0"	.83	.05
12"	1'-6"	2'-0"	4.25	.24	2'-3"	6.00	.34	1'-9"	3.25	.18	1'-3"	1.65	.10	1'-0"	.83	.05
16"	2'-0"	2'-7"	7.54	.56	3'-0"	10.65	.79	2'-3"	5.76	.43	1'-8"	2.94	.22	1'-2"	1.48	.11
18"	2'-0"	2'-11"	7.70	.57	3'-5"	10.89	.82	2'-6"	5.89	.44	1'-10"	3.01	.22	1'-5"	1.51	.11
20"	2'-0"	3'-3"	7.86	.59	3'-9"	11.12	.84	2'-9"	6.01	.45	2'-0"	3.07	.23	1'-7"	1.54	.12
24"	2'-0"	3'-8"	11.33	.84	4'-3"	16.00	1.20	3'-2"	8.65	.65	2'-6"	4.42	.33	1'-10"	2.22	.17

NOTES:

1. CALCULATIONS IN MIN. AREA COLUMN ARE IN SQUARE FEET. CALCULATIONS IN MAX. VOL. COLUMN ARE IN CUBIC YARDS.
2. ALL FITTINGS SHALL BE WRAPPED IN 8 MIL AWWA STAMPED POLY, WHERE CONCRETE IS PLACED. CONCRETE SHALL NOT BE IN CONTACT WITH BOLTS.
3. MEGALUGS ARE REQUIRED IN ADDITION TO CONCRETE THRUST BLOCKS.

DRAFT

CITY OF BELTON, TEXAS
DEPARTMENT OF PUBLIC WORKS

THRUST BLOCKS FOR WATER AND FORCE MAINS

CONSTRUCTION STANDARDS AND DETAILS

W-08
SCALE: N.T.S.
ISSUE DATE: XXX

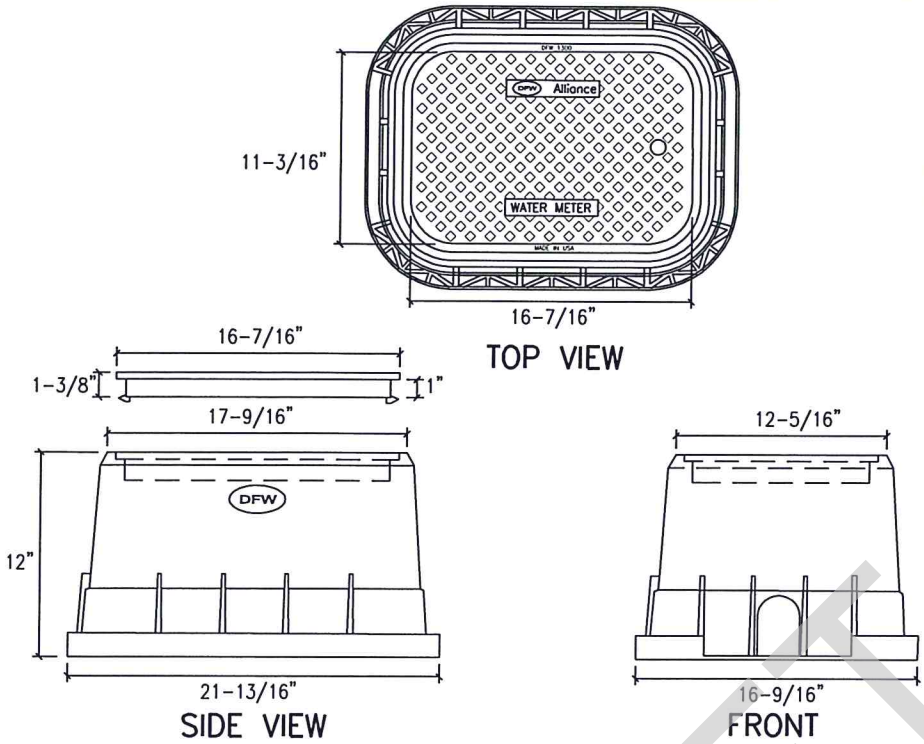

METER BOX SHALL BE DFW 1300 MODEL, 12" DEEP.

FOR 5/8", 3/4" AND 1" METERS

NOT TO SCALE

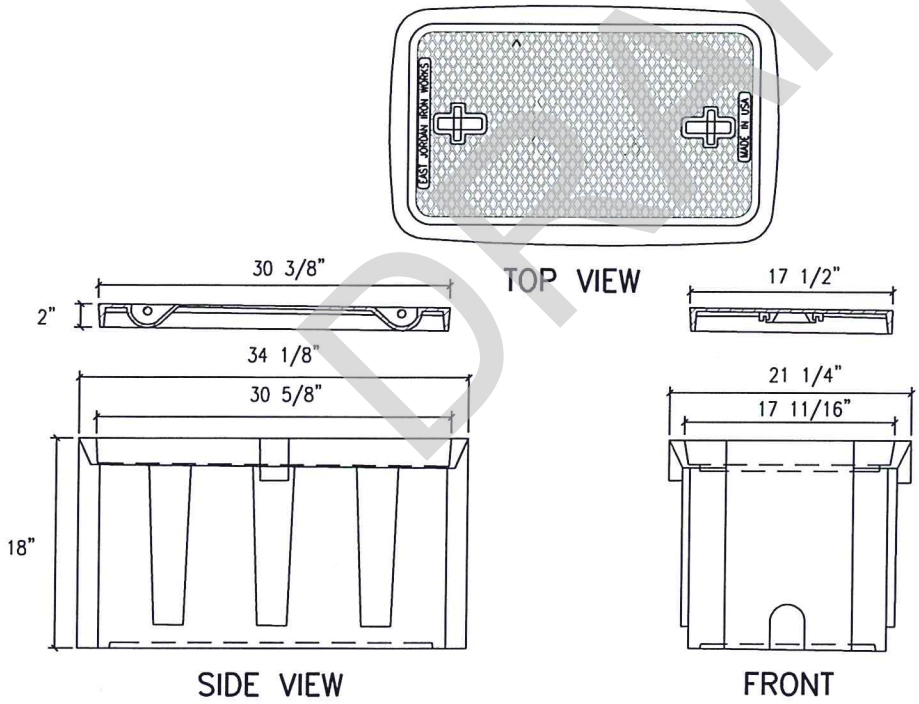

METER BOX SHALL BE EAST JORDAN 1730 MODEL, 18" DEEP.

NOTES:

1. REFER TO DETAIL W-02 FOR METER BOX PLACEMENT.
2. METER BOXES SHALL BE CAST IRON IF LOCATED IN A TRAFFIC AREA.

FOR 1-1/2" AND 2" METERS

NOT TO SCALE

DRAFT

CITY OF BELTON, TEXAS

DEPARTMENT OF PUBLIC WORKS

METER BOXES

CONSTRUCTION STANDARDS AND DETAILS

W-09

SCALE: N.T.S.

ISSUE DATE: XXX

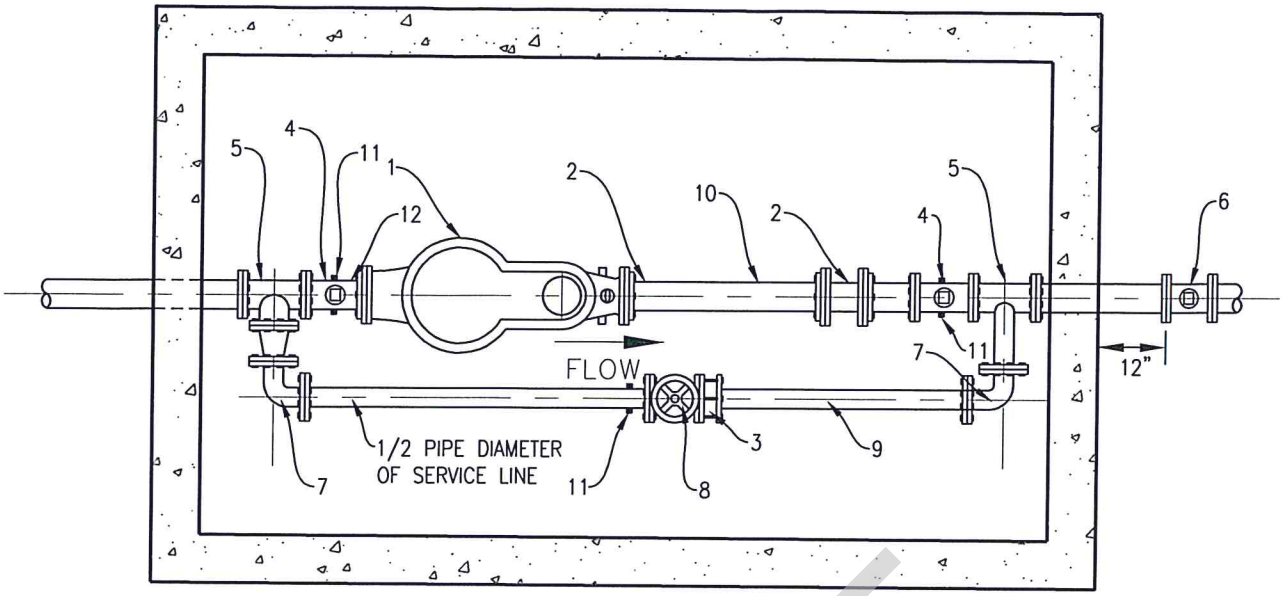

PLAN VIEW
NOT TO SCALE

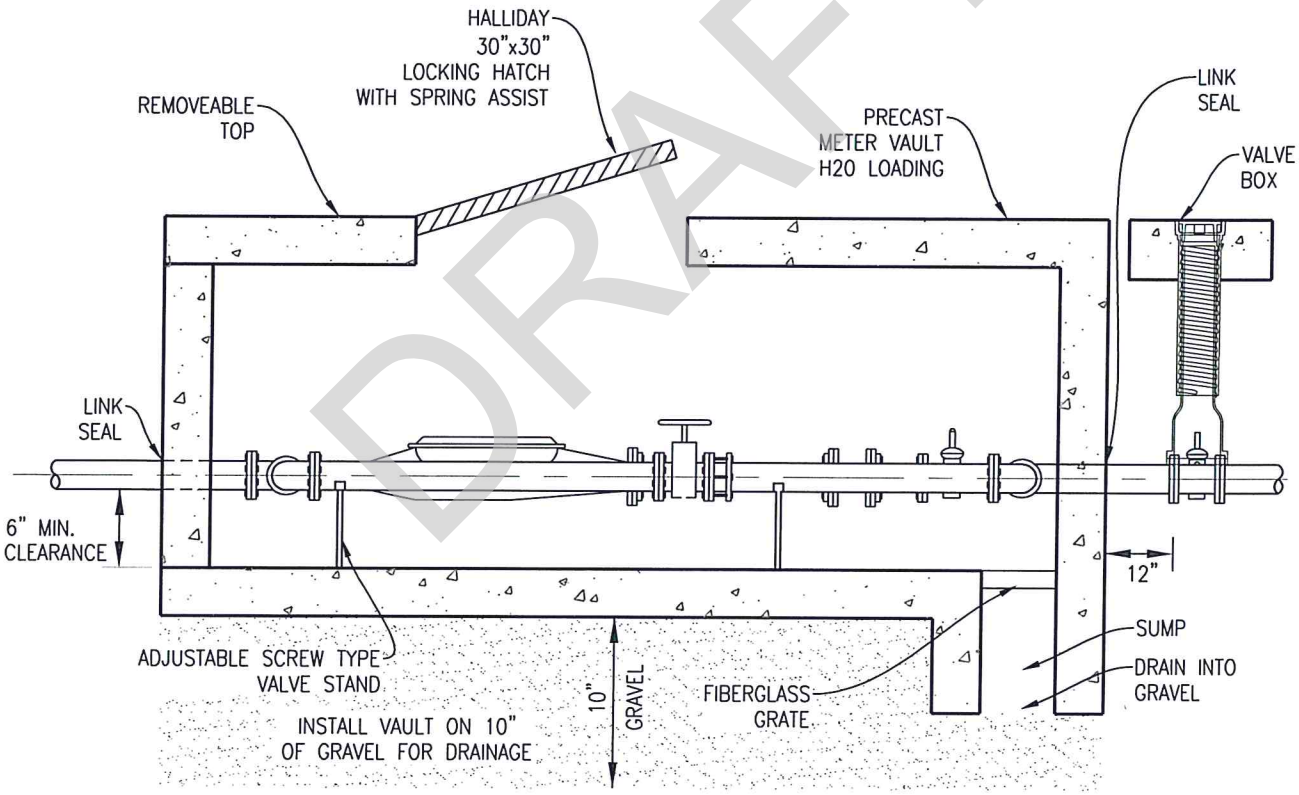

ELEVATION
NOT TO SCALE

DRAFT

CITY OF BELTON, TEXAS
DEPARTMENT OF PUBLIC WORKS

METER VAULT LAYOUT FOR 2" AND LARGER WITH AND WITHOUT BYPASS

CONSTRUCTION STANDARDS AND DETAILS

W-10A
SCALE: N.T.S.
ISSUE DATE: XXX

No.	DESCRIPTION
1.	METER
2.	SOLID SLEEVE WITH MEGALUGS
3.	FLANGED COUPLING ADAPTER
4.	FLANGED GATE VALVE
5.	FLANGED TEE
6.	PROPERTY OWNER'S GATE VALVE SQUARE NUT
7.	FLANGED ELBOW 90°
8.	BYPASS GATE VALVE WITH HANDWHEEL
9.	BYPASS DUCTILE IRON PIPE
10.	FLANGED SPOOL
11.	ADJUSTABLE PIPE STAND
12.	STRAINER

NOTES:

1. PIPE AND METER SIZE SHALL BE AS APPROVED BY CITY ENGINEER. BYPASS SHALL BE ONE PIPE DIAMETER SMALLER THAN MAIN.
2. METER VAULT MUST BE BEHIND CURB AND/OR WALK AND OUT OF VEHICULAR TRAFFIC.
3. MAIN LINE AND BYPASS VALVES SHALL BE RESILIENT SEAT TYPE WITH CORROSION RESISTANT FUSION BANDED EPOXY COATING INSIDE AND OUTSIDE, NON-RISING STEM. MAIN LINE VALVES SHALL HAVE SQUARE OPERATING NUTS. BYPASS VALVE SHALL HAVE A HANDWHEEL. PROPERTY OWNER'S VALVE SHALL BE LOCATED OUTSIDE OF THE METER VAULT.
4. METER HATCH LOCATION SHALL BE MODIFIED TO READ FROM TOP OF VAULT.
5. HATCH OPENING SHALL BE 30" X 30" WITH HALLIDAY HATCH.
6. IRON PIPE TAPPING SLEEVE IN STREET RIGHT-OF-WAY SHALL BE PROPERLY BEDDED.
7. ALL FITTINGS INSIDE VAULT SHALL BE FLANGED. FITTINGS OUTSIDE VAULT SHALL BE MJ.
8. NOTCHES WHERE PIPING GOES THROUGH VAULT SHALL BE FILLED WITH MORTAR.
9. THE TOP OF THE METER VAULT SHALL BE SET AT AN ELEVATION SUCH THAT THE SURROUNDING GROUND SLOPES AWAY FROM THE VAULT.
10. IF METER VAULT IS MORE THAN 3' DEEP, PERMANENT STAINLESS STEEL LADDER SHALL BE INCLUDED AS PART OF THE INSTALLATION.
11. APPROVED CITY OF BELTON LOCK AND CHAIN SHALL BE INSTALLED.
12. ALL EXTERNAL NUTS, BOLTS, AND WASHERS SHALL BE STAINLESS STEEL.

DRAFT

CITY OF BELTON, TEXAS
DEPARTMENT OF PUBLIC WORKS

METER VAULT NOTES

CONSTRUCTION STANDARDS AND DETAILS

W-10B
SCALE: N.T.S.
ISSUE DATE: XXX

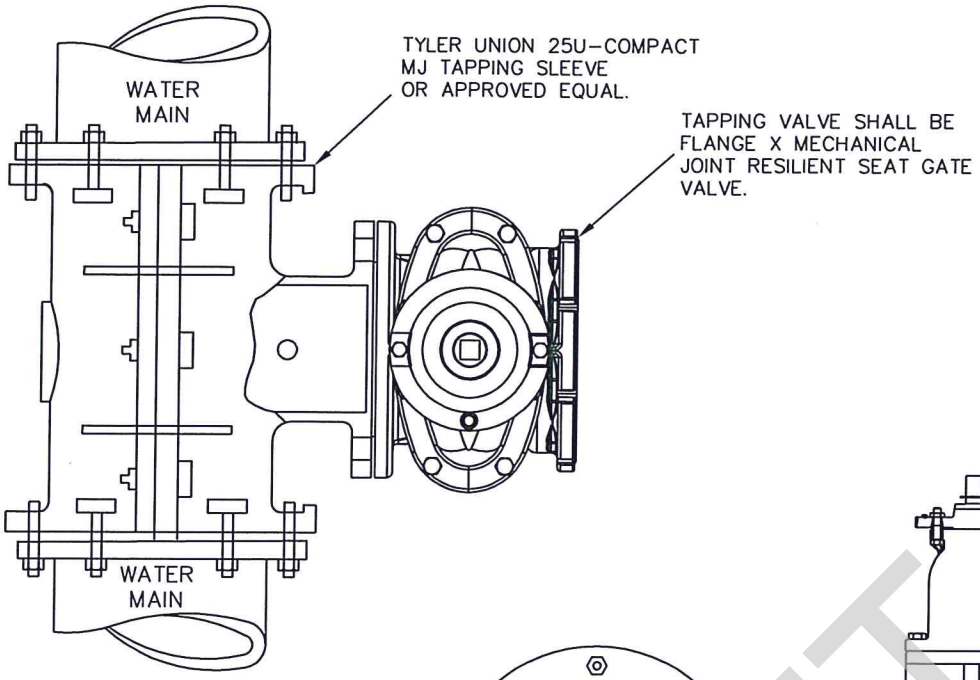

NOTE:
PROVIDE CONCRETE THRUST BLOCKING EQUIVALENT TO APPLICABLE TEE.
REFER TO STANDARD DETAIL W-08 FOR ADDITIONAL DETAIL.

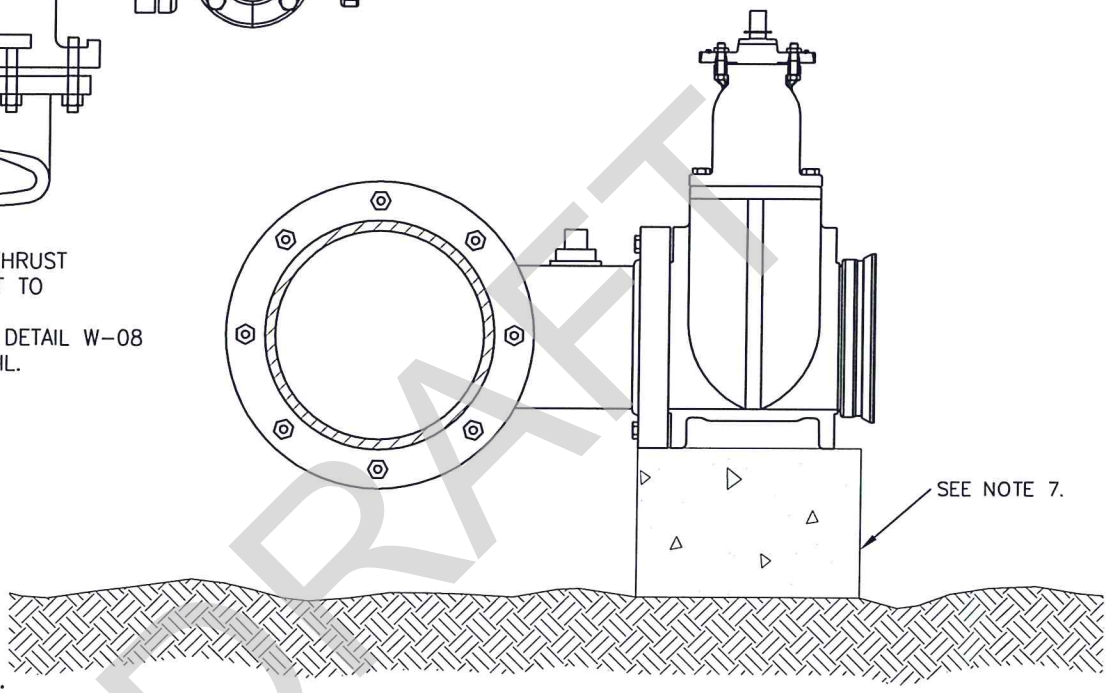

DRAFT

GENERAL NOTES:

1. TAPPING SLEEVE SHALL BE FULL BODY CONSTRUCTED OF 304 STAINLESS STEEL. DUCTILE FLANGE IS PERMISSIBLE.
2. RUBBER GASKET SHALL BE A 360° COMPLETE FULL CIRCLE.
3. BRANCH SHALL BE A MINIMUM 3/8" LARGER THAN NORMAL TO ALLOW FOR FULL SIZE CUTTER HEAD.
4. TAPPING SLEEVE SHALL BE SUPPLIED WITH FLANGE FACE ON BRANCH.
5. TAPPING SLEEVE SHALL HAVE A FLANGE FACE GASKET PERMANENTLY ATTACHED TO SLEEVE AT FACTORY.
6. LUGS SHALL BE STRUCTURALLY WELDED TO THE SHELL OR BOLTED.
7. TAPPING VALVE AND TAPPING EQUIPMENT SHALL BE SUPPORTED BY BLOCKING DURING AND AFTER INSTALLATION.
8. THOROUGHLY CLEAN WATER MAIN WITH WIRE BRUSH PRIOR TO INSTALLATION OF TAPPING SLEEVE.
9. FLANGE FACE SHALL BE INSTALLED VERTICALLY TRUE AND PLUMB.
10. TAPPING SLEEVE SHALL NOT BE INSTALLED WITHIN 4 (FOUR) PIPE DIAMETERS OF AN EXISTING PIPE BELL UNLESS APPROVED OTHERWISE.
11. INSTALL PER MANUFACTURERS RECOMMENDATIONS.

CITY OF BELTON, TEXAS
DEPARTMENT OF PUBLIC WORKS

TAPPING SLEEVE AND VALVE

CONSTRUCTION STANDARDS AND DETAILS

W-11
SCALE: N.T.S.
ISSUE DATE: XXX

SECTION 5 - WASTEWATER

5.01 General

The purpose of this section is to define the general requirements for the design of wastewater infrastructure and to provide typical construction details for the improvements. The City of Belton Public Works Department should be consulted if variations from these standards are anticipated.

5.02 Master Plan

All wastewater improvements design must be sized and located according to the land use projected in the Comprehensive Plan. Also, the City of Belton periodically updates the Wastewater Master Plan which should be followed and adhered to during the design process.

5.03 Wastewater Improvements

The subdivider shall provide all wastewater lines required to properly serve each lot of the subdivision and to ensure that existing and new wastewater lines and facilities can adequately serve the subdivision. The subdivider shall bear all costs for extending existing City wastewater lines and wastewater facilities to have sufficient capacity to serve the subdivision. All wastewater lines and service connections shall conform to current City Design Manual, Texas Commission on Environmental Quality Regulations (Texas Administrative Code Title 30, Part 1, Chapter 217) and the requirements of the Texas Department of Health.

A. Design Standards

1. Piping for wastewater lines shall be in accordance with the current City Design Manual and Texas Commission on Environmental Quality Regulations. All pipe shall be new and shall conform to American Society of Testing Materials, Standard D3034. PVC sewer pipe joints shall comply with American Society of Testing Materials, Standard D3212.

2. Minimum and Maximum Allowable Slopes in Percent shall be in accordance with TCEQ Chapter 217. Additionally, the City of Belton has established a more conservative minimum slope which shall be required unless approved otherwise by the City Engineer. These allowable slopes are summarized in the following table:

DRAFT

Size of Pipe *(inches)*	**City of Belton Minimum Slope** *(%)*	**TCEQ Minimum Slope** *(%)*	**TCEQ Maximum Slope** *(%)*
6	0.60	0.50	12.35
8	0.50	0.33	8.40
10	0.33	0.25	6.23
12	0.25	0.20	4.88
15	0.20	0.15	3.62
18	0.15	0.11	2.83
21	0.11	0.09	2.30
24	0.09	0.08	1.93
27	0.08	0.06	1.65
30	0.060	0.055	1.43
33	0.055	0.050	1.26
36	0.050	0.045	1.12
39	0.045	0.040	1.01
>39		*	*
	* For pipes larger than 39 inches in diameter, the slope is determined by Manning's formula to maintain a velocity greater than 2.0 feet per second and less than 10.0 feet per second when flowing full.		

DRAFT

3. Wastewater connections shall be readily available to proposed park sites with lines located along the street frontage of the park. The subdivider must demonstrate that there is sufficient wastewater line capacity available to serve the park.

4. Septic tanks shall not be permitted.

5. Manholes shall be constructed at all changes in direction sewer line intersections, termination points of lines, and at intervals of not more than five-hundred (500) feet, unless approved by the City Engineer.

6. A minimum 100 mil coat of Raven 405 Ultra High Build Epoxy Coating or approved equal shall be applied to entire interior of each wastewater manhole and underside of flat tops where accepting influent from force mains, drop connections and to include the nearest two (2) manholes upstream and downstream. The City's On-site Representative shall inspect each manhole prior to application of coating system or the manhole shall be coated at the manufacturing facility with approved certificates/submittal.

7. Pipe crown elevations of mains flowing into manholes shall be 0.1 feet above the crown of the out-flowing main.

8. Separation distances between water and wastewater infrastructure shall be in accordance with TCEQ Regulations (Chapters 217 and 290). Where encasement is required, steel casing shall be in accordance with the detail included in the General Utilities section.

B. Materials and Sizing

1. All materials used in wastewater improvement projects shall be North American domestic.
2. All wastewater lines shall conform to the following specifications:

   a) Gravity wastewater lines shall be a minimum of eight (8) inches in diameter, PVC SDR 26 with elastomeric joints and meet the requirements of ASTM specification D-3034. PVC sewer pipe joints shall comply with American Society of Testing Materials, Standard D3212.
   b) The minimum house connection size shall be four (4) inches in diameter.
   c) Force Mains 8 inches or less shall be PVC, AWWA C900 DR-18.
   d) Force Mains greater than 8 inches shall be Ductile Iron and shall have the interior wall cement lined and seal coated, unless specified differently. A shop applied bituminous coating shall be applied on the exterior surface of pipe. Coatings shall be applied in accordance with AWWA C104 and the Painting Specifications. The interior surface of the pipe shall be lined with Protecto 401 ceramic epoxy lined with a minimum thickness of 40 mil.

3. Gravity wastewater lines shall be green in color. Force Mains shall be green or white in color.

C. Appurtenances

Manholes, cleanouts, and other associated items for completion of a wastewater system are shown on the following detail sheets as to material types and dimensions. Valve requirements for Force Mains shall be the same as for Water Lines as described in Section 4.03A.6.

DRAFT

5.04 Testing

Testing of installed improvements shall meet all Texas Commission on Environmental Quality requirements and guidelines.

A. Vacuum air testing shall be done after the rings are in place per ASTM No. C1244 with the cover omitted.

B. Low Pressure Air Tests shall be based on time versus pressure drop from 3.5 PSI to 2.5 PSI.

C. Deflection testing shall be done 30 days or more following the completion of installation. Mandrels shall measure 95% of the base inside diameter of the pipe involved.

5.05 Construction Plans

Construction drawings for wastewater installation shall contain both plan and profile view labeled with percent slopes, flowline elevations (based on mean sea level elevations) at each manhole, required design capacity in MGD, actual capacity in MGD, and horizontal dimensioning to easement and/or property line.

5.06 Lift Stations

The following are minimum standards for all proposed lift stations in the City of Belton and the City of Belton Sewer CCN. Applications proposing grinder pump stations shall also follow these standards, as applicable.

All lift stations and appurtenances shall meet the requirements of the City of Belton Design Standards as well as the Texas Administrative Code, Chapter 217. For any conflicts between the City Design Manual and the regulatory requirements, the more stringent detail shall apply. All lift stations and appurtenances shall be designed by a Texas Registered Professional Engineer.

A. Submittals

1. All lift station shop drawings and submittals shall be reviewed by the City Engineer, and construction shall not proceed until submittals are approved by the Department.
2. Record drawings, approved submittals, and all operation and maintenance (O&M) manuals shall be provided to the City Engineer following construction.
3. The final document package shall include pump and motor descriptions, capacities for all equipment and wells, control diagrams, material descriptions, and contact name and number for maintenance and repairs on all equipment.

B. Location and Site Details

1. The site layout, location, and site grading must be approved by the City Engineer.
2. Lift stations shall be located outside any drainage areas and 100-year floodplains, including wave action.
3. Clearance around the lift station fencing shall be 15 feet at minimum.
4. The interior, inside the fence of the lift station shall be concrete. The concrete must be a minimum of 6 inches thick with No. 4 rebar placed every 12 inches on center and includes an 18 inches deep footer around the perimeter. Interior footings may be required. The concrete for the columns and walls may be poured at the same time as the interior floor provided the appropriately sized footer is included. Concrete shall be poured a minimum of 6 inches outside of the exterior walls as a “mow strip”. Subgrade must be prepared per the geotechnical report.
5. Landscape and fencing shall meet the City’s most current Design Guidelines and shall include weed barrier and automatic irrigation. In addition to the Design Guidelines, the entry gate to the lift station shall be two equally sized, 16 feet wide gates made of steel, have a lock open device, be equipped with a lockable slide hasp, and have an 18-inch star made into and of the same material gauge as the fence.

C. Access

DRAFT

1. The access road shall have standard curb and gutter and be paved with a minimum of 2 inches of Type “D” HMAC. All subgrade shall be constructed per the recommendation of the geotechnical report.

D. Electrical and Controls

1. Control Panel shall be NEMA 4X and be manufactured by a certified UL508 facility.
2. Each station must be equipped with a two service 110 volt 20 amp weather proof electrical outlets at a minimum. These outlets shall not be within the control panel.
3. Emergency alarm lights must be mounted at a location that is visible through the gate or high enough to be above the masonry wall.
4. Pump wires shall be installed in a separate NEMA 4X Junction Box w/terminal block. Exposed wires, nuts, etc. shall be coated with appropriate corrosion protection.
5. Control wires (floats) shall be installed in a separate NEMA 4X Junction Box w/terminal block. Exposed wires, nuts, etc. shall be coated with appropriate corrosion protection.
6. Omni Site hardware and provisions shall be provided. Any antenna boosters required shall be included.
7. Stations requiring any building or a MCC will be reviewed and approved by the City Engineer and the City Building Official.

E. Manholes and Wet/Dry Wells

1. Install a manhole located near the fenced area prior to the sewer entering the wet well. Multiple manholes may be required by the City Engineer.
2. Wet wells must be equipped with a “stilling well” on the influent pipe. Concrete wet wells must be Raven coated with a minimum of 120 mils or as required by the coatings manufacturer, whichever is thicker. The manhole that receives the force main discharge and the next downstream manhole shall be Raven coated to 120 mils.
3. Fiberglass Wet Wells may be allowed with appropriate backfill and written approval from the City Engineer.
4. Entrance Hatches shall be aluminum and manufactured by Halliday, sized and supported appropriately, have a lock open device, be lockable, be H20 traffic rated, have a minimum opening of 36” x 36”, and use all stainless steel hardware.
5. Vents are be required, and shall be stainless steel and designed to hold an odor neutralizing agent such as activated carbon as recommended by the design engineer. Size and type of odor control mechanism shall be approved by the City Engineer.

F. Utilities

1. Potable water shall be metered and be equipped with a RPZ backflow prevention assembly. All potable water utilities shall be installed in a freeze proof cabinet with easy access doors on each side. A frost free hydrant shall be installed as well as a hose rack.
2. Piping shall be class 350 ductile iron unless alternate piping has been preapproved, in writing, by the City Engineer.
3. Bypass Pumping Connections shall be equipped with a properly sized bypass including vault, valves, and quick disconnect hose adaptor and cap.
4. All ductile iron fittings, valves, etc. shall be coated with suitable 401 epoxy paint as recommended by the engineer. All piping shall have Protecto 401 epoxy lining.

DRAFT

G. Emergency Provisions and Security

1. A generator is required for power outages and shall be manufactured by Generac or approved equal, and shall have an automatic transfer switch. The unit shall be fueled by natural gas.
2. The audio and visual alarms and signage must be able to be heard and seen from the adjacent community.
3. The generator shall be designed to operate the lift station at firm capacity and fueled to operate the lift station for a minimum of 48 run-time hours.
4. Security lighting shall be adequately provided to illuminate the site well enough to safely enter the station.
5. Provide and install an identification sign according to the details provided in the Design Standards. Sign shall be made of noncorrosive materials. A proof of the sign shall be submitted to the City Engineer and a written approval must be received prior to the sign being ordered.

H. Pumps and Motors

1. Pumps shall be manufactured by Flygt, Flowserve, Zoeller, Hydromatic, or approved equal. Pump motors shall be manufactured by US Motors (Nidec), TECO-Westinghouse, or approved equal. Pump and motor manufacturers shall be approved by the City Engineer.
2. A minimum of two pumps are required in each lift station.
3. Each pump shall have a separate hour meter located on the control panel.
4. Controls shall be equipped with a switch that automatically switches the lead pump designation.
5. Provide provisions for future expansion of the lift station, if directed by the City Engineer.

I. Materials

1. All brackets, rails, hardware, nuts, bolts, float hangers, etc. shall be made of stainless steel.

DRAFT

NOTES:

1. MANHOLES SHALL BE PRECAST ASTM C-478 BELL WITH RUBBER GASKET JOINTS PER ASTM C443.
2. SEE PLANS AND MANHOLE SCHEDULE, FOR MANHOLE SIZE, LOCATION, CONFIGURATION, TYPE OF TOP SECTION, VENTING REQUIREMENTS, PIPE SIZE AND TYPES.
3. A MINIMUM 100 MIL COAT OF RAVEN 405 ULTRA HIGH BUILD EPOXY COATING OR APPROVED EQUAL SHALL BE APPLIED TO ENTIRE INTERIOR OF EACH WASTEWATER MANHOLE AND UNDERSIDE OF FLAT TOPS WHERE ACCEPTING INFLUENT FROM FORCE MAINS, DROP CONNECTIONS AND TO INCLUDE THE NEAREST TWO (2) MANHOLES UPSTREAM AND DOWNSTREAM. THE CITY'S ON-SITE REPRESENTATIVE SHALL INSPECT EACH MANHOLE PRIOR TO APPLICATION OF COATING SYSTEM OR THE MANHOLE SHALL BE COATED AT THE MANUFACTURING FACILITY WITH APPROVED CERTIFICATES/SUBMITTAL.
4. ALL MANHOLE COVERS SHALL BE BOLTED AND GASKETED WHEN MANHOLES ARE LOCATED IN THE FLOODPLAIN. VENTING SHALL BE PROVIDED IN ACCORDANCE WITH TCEQ CHP. 217 REGULATIONS
5. MANHOLES TO BE VENTED SHALL BE IDENTIFIED IN PLANS. REFERENCE MANHOLE VENT DETAIL.
6. MANHOLES SHALL BE DESIGNED TO RESIST LATERAL AND VERTICAL SOIL FORCES RESULTING FROM MANHOLE DEPTH. ADDITIONALLY, MANHOLES LOCATED IN PAVEMENT TO BE DESIGNED FOR HS-20 TRAFFIC LOADS.
7. ALL MANHOLE JOINTS SHALL BE WRAPPED ON OUTSIDE WITH 12" MASTIC TAPE.
8. ALL MANHOLES SHALL BE VACUUM TESTED PER ASTM C1244. GROUTING SHALL OCCUR AFTER VACUUM TESTING.
9. ALL MANHOLE PENETRATIONS SHALL BE CAST OR CORED AND A SEAL BOOT INSTALLED.
10. DROP CONNECTIONS SHALL BE REQUIRED WHENEVER AN INFLUENT SEWER IS LOCATED TWENTY FOUR INCHES (24") OR MORE ABOVE THE MAIN INVERT CHANNEL.
11. EXISTING MANHOLES WITH INTERIOR COATING THAT ARE CORED, SHALL BE RECOATED.
12. PIPING LAID THROUGH NEW MANHOLES SHALL BE REMOVED AFTER INVERT IS IN PLACE. INVERT SHALL BE SHAPED AND FINISHED BY HAND FLOAT AND TROWEL.
13. MANHOLES LOCATED IN AREAS SUBJECT TO FLOODING SHALL HAVE A RIM ELEVATION OF 12-INCHES ABOVE NATURAL GROUND. CONSIDERATION SHALL BE GIVEN TO WATERTIGHT MANHOLES WITH VENTS.
14. FOR MANHOLES WITH VARYING SIZE PIPELINES, PIPE CROWNS SHALL BE MATCHED AS MINIMUM DROP ACROSS INVERT.
15. MINIMUM MANHOLE DIAMETERS SHALL BE AS FOLLOWS:

PIPE DIAMETER	MANHOLE DIA.
≤18"	4'-0"
21" TO 36"	5'-0"
≥ 42"	6'-0"

DRAFT

CITY OF BELTON, TEXAS
DEPARTMENT OF PUBLIC WORKS

MANHOLE NOTES

CONSTRUCTION STANDARDS AND DETAILS

WW-01
SCALE: N.T.S.
ISSUE DATE: XXX

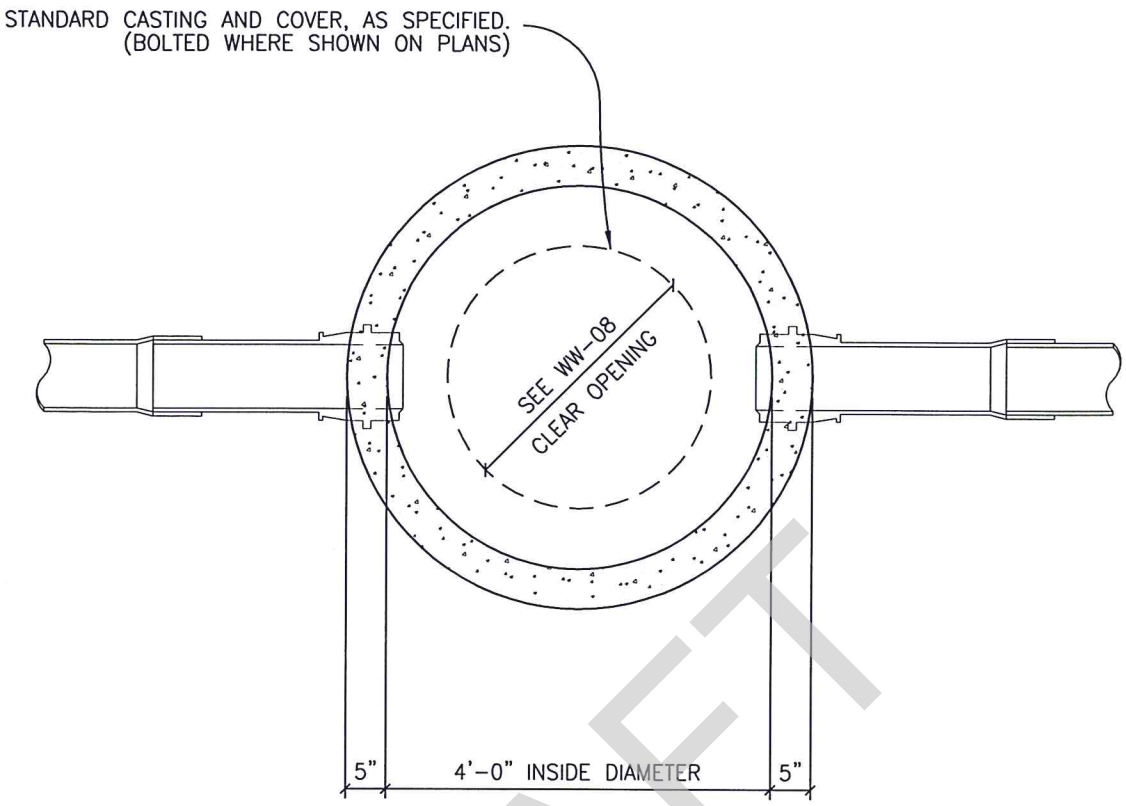

DRAFT

NOTES:

1. ALL MANHOLES SHALL BE 48" I.D., WITH RUBBER GASKET JOINTS CONFORMING TO ASTM C478 AND C433, UNLESS OTHERWISE APPROVED.
2. ALL MANHOLES SHALL HAVE FRAME AND COVER, AS MANUFACTURED BY EAST JORDAN IRON WORKS (AS PER DETAIL # WW-07) OR APPROVED EQUIVALENT.
3. ALL MANHOLES SHALL HAVE AN ECCENTRIC CONE.
4. MANHOLES MAY HAVE A FLAT LID, IF APPROVED BY THE CITY, WITH A MINIMUM 30" OPENING, CONFORMING TO ASTM C478, 5000 P.S.I. CONCRETE, TRAFFIC BEARING, AND RUBBER GASKET JOINT CONFORMING TO ASTM C443.
5. INVERTS AND FLEXIBLE SEAL BOOTS, PER ASTM C-923, SHALL BE CAST INTO BASE SECTION.
6. MINIMUM DROP BETWEEN INVERTS SHALL BE ONE-TENTH OF A FOOT (0.1').
7. GRADE RINGS WITH AN I.D. TO MATCH FRAMES MINIMUM CLEAR OPENING WITH A MAXIMUM GRADE RING HEIGHT OF 11", 4" MINIMUM PAVED AREAS.
8. REFER TO ADDITIONAL WASTEWATER NOTES ON WW-01.

CITY OF BELTON, TEXAS
DEPARTMENT OF PUBLIC WORKS

STANDARD MANHOLE PLAN OUTSIDE ROADWAY

CONSTRUCTION STANDARDS AND DETAILS

WW-02
SCALE: N.T.S.
ISSUE DATE: XXX

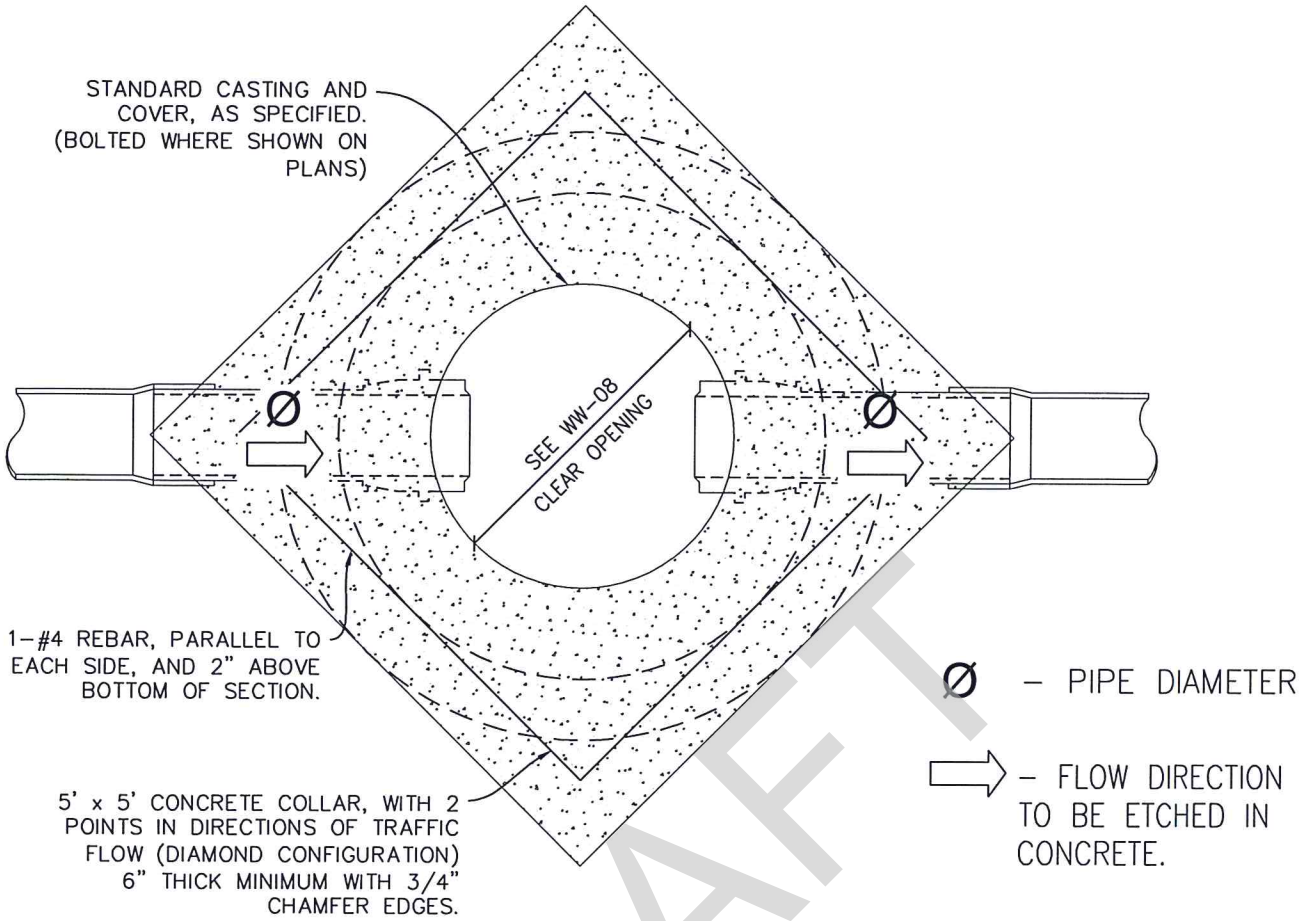

DRAFT

NOTES:

1. ALL MANHOLES SHALL BE 48" I.D., WITH RUBBER GASKET JOINTS CONFORMING TO ASTM C478 AND C433, UNLESS OTHERWISE APPROVED.
2. ALL MANHOLES SHALL HAVE FRAME AND COVER, AS MANUFACTURED BY EAST JORDAN IRON WORKS (AS PER DETAIL # WW-07) OR APPROVED EQUIVALENT.
3. ALL MANHOLES SHALL HAVE AN ECCENTRIC CONE.
4. MANHOLES MAY HAVE A FLAT LID, IF APPROVED BY THE CITY, WITH A MINIMUM 30" OPENING, CONFORMING TO ASTM C478, 5000 P.S.I. CONCRETE, TRAFFIC BEARING, AND RUBBER GASKET JOINT CONFORMING TO ASTM C443.
5. INVERTS AND FLEXIBLE SEAL BOOTS, PER ASTM C-923, SHALL BE CAST INTO BASE SECTION.
6. MINIMUM DROP BETWEEN INVERTS SHALL BE ONE-TENTH OF A FOOT (0.1').
7. GRADE RINGS WITH AN I.D. TO MATCH FRAMES MINIMUM CLEAR OPENING WITH A MAXIMUM GRADE RING HEIGHT OF 1'-0", 4" MINIMUM PAVED AREAS.
8. REFER TO ADDITIONAL WASTEWATER NOTES ON WW-01.
9. CITY ENGINEER MAY REQUIRE CONCRETE COLLARS ON WASTEWATER MANHOLES THAT ARE NOT IMMEDIATELY ADJACENT TO ROADWAYS.

CITY OF BELTON, TEXAS
DEPARTMENT OF PUBLIC WORKS

STANDARD MANHOLE PLAN INSIDE ROADWAY

CONSTRUCTION STANDARDS AND DETAILS

WW-03
SCALE: N.T.S.
ISSUE DATE: XXX

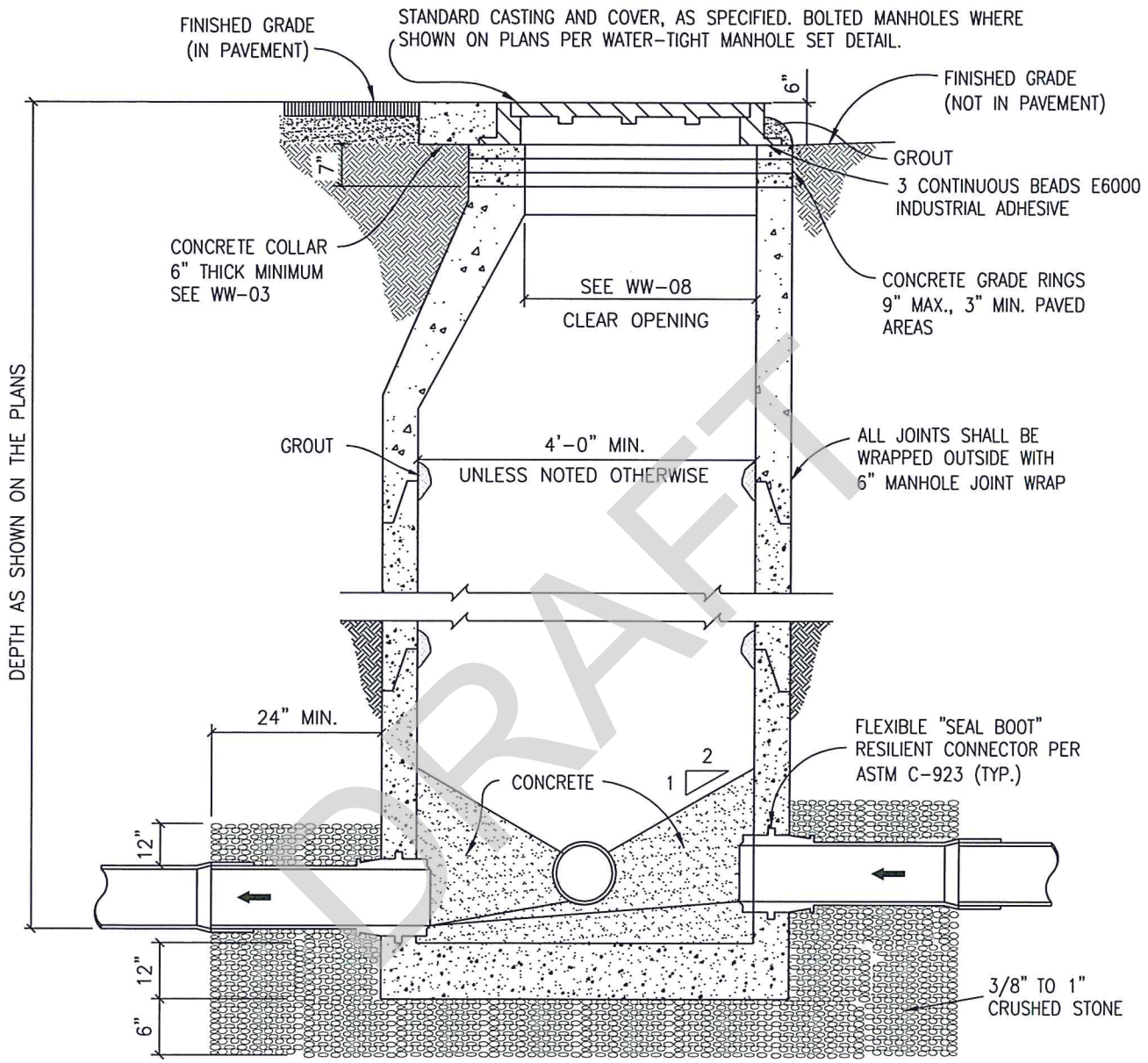

DRAFT

REFER TO ADDITIONAL MANHOLE NOTES ON WW-01.

NOTE:

ALL CONCRETE SHALL BE CLASS "A" 3,000 PSI CONCRETE.

CITY OF BELTON, TEXAS

DEPARTMENT OF PUBLIC WORKS

STANDARD MANHOLE SECTION

CONSTRUCTION STANDARDS AND DETAILS

WW-04

SCALE: N.T.S.

ISSUE DATE: XXX

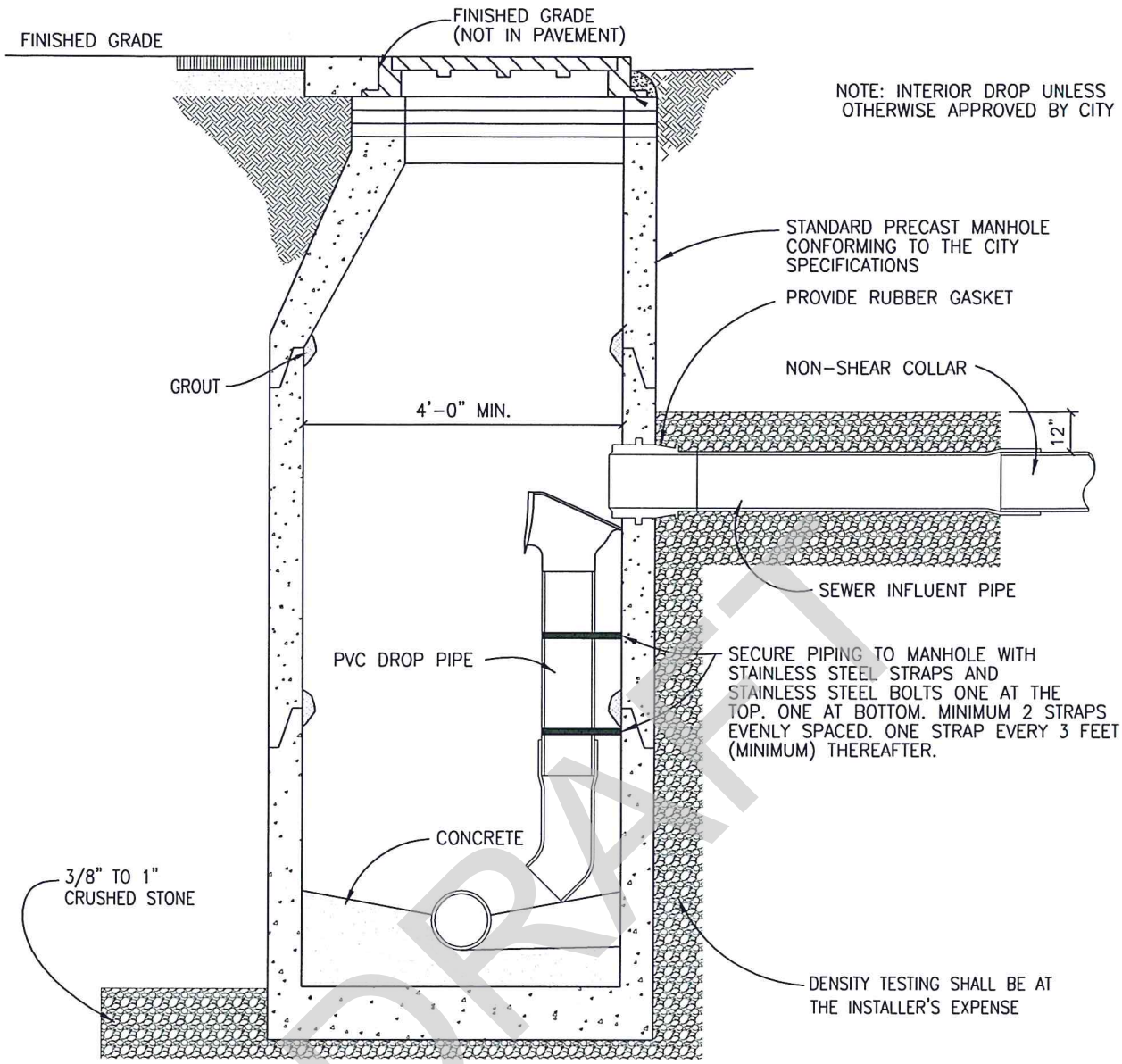

DRAFT

NOTES:

1. DROP CONNECTIONS SHALL BE REQUIRED WHENEVER AN INFLUENT SEWER IS LOCATED TWENTY FOUR INCHES (24") OR MORE ABOVE THE MAIN INVERT CHANNEL.
2. DROP MANHOLES, ONE MANHOLE UPSTREAM AND TWO MANHOLES DOWNSTREAM SHALL BE COATED ENTIRELY WITH 100 MIL OF RAVEN 405 ULTRA HIGH BUILD EPOXY.
3. A FLOW CHANNEL SHALL BE CONSTRUCTED INSIDE MANHOLE TO DIRECT INFLUENT INTO FLOW STREAM.
4. WHEN P.V.C. IS USED IN SANITARY SEWER LINES, SOLVENT TYPE JOINT P.V.C. FITTINGS MAY BE UTILIZED IN THE DROP ASSEMBLY ONLY.
5. SEE STANDARD MANHOLE DETAIL (DWG. # WW-04) FOR ADDITIONAL REQUIREMENTS.
6. INTERNAL DROP CONNECTION PERMITTED ONLY WITH WRITTEN APPROVAL FROM THE CITY ENGINEER.
7. REFER TO ADDITIONAL NOTES ON WW-01.
8. ALL CONCRETE SHALL BE CLASS "A" 3,000 PSI CONCRETE.
9. DROP BOWL SHALL BE MANUFACTURED BY RELINER/DURAN INC., TYPE AND SIZE SHALL BE BASED ON PIPE DIAMETER AND FLOW RATE.

CITY OF BELTON, TEXAS

DEPARTMENT OF PUBLIC WORKS

DROP CONNECTION PRECAST MANHOLE

CONSTRUCTION STANDARDS AND DETAILS

WW-05

SCALE: N.T.S.

ISSUE DATE: XXX

FLOW PATTERNS FOR INVERT CHANNELS

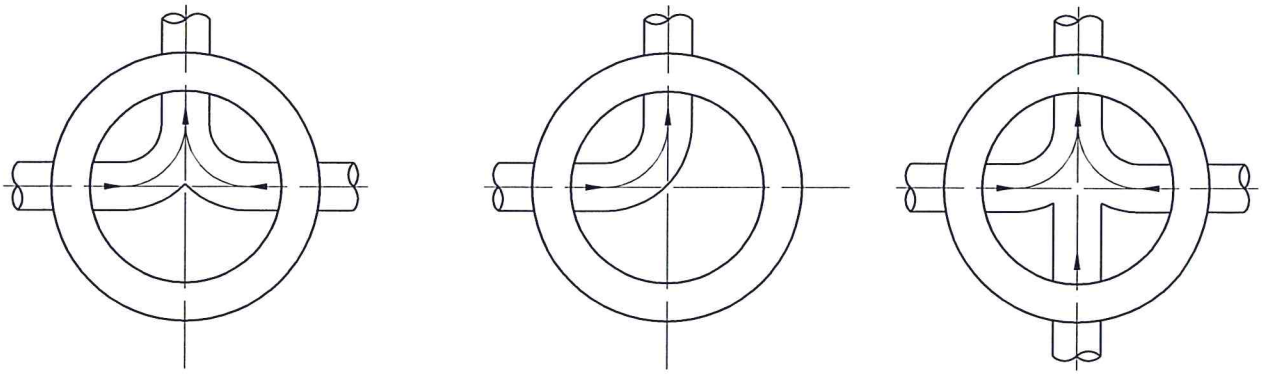

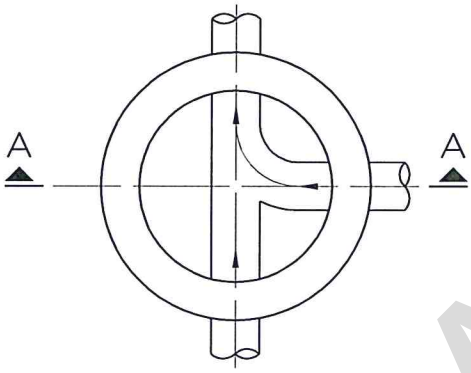

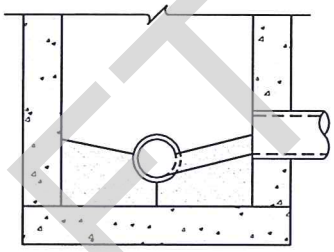

SECTION "A–A"

DRAFT

NOTES:

1. INVERT CHANNELS TO BE CONSTRUCTED FOR SMOOTH FLOW WITH NO OBSTRUCTIONS.
2. HYDRAULIC SLIDES SHALL BE CONSTRUCTED BETWEEN PIPES WITH DIFFERENT INVERT ELEVATIONS PROVIDING FOR SMOOTH FLOW.
3. CHANNELS FOR FUTURE CONSTRUCTION (STUBS) SHALL BE CONSTRUCTED, FILLED WITH SAND, AND COVERED WITH 1" OF MORTAR.
4. SLOPE MANHOLE BENCH WITH A 1:2 SLOPE FROM MANHOLE WALL TO CHANNEL.
5. INVERT DEPTHS SHALL BE AS FOLLOWS:

PIPE DIAMETER	INVERT DEPTH (BENCH)
< 15"	1/2 LARGEST PIPE DIA.
15" TO 24"	3/4 LARGEST PIPE DIA.
> 24"	EQUAL TO LARGEST PIPE DIA.

CITY OF BELTON, TEXAS
DEPARTMENT OF PUBLIC WORKS

FLOW PATTERNS
FOR INVERT CHANNELS

CONSTRUCTION STANDARDS AND DETAILS

WW–06
SCALE: N.T.S.
ISSUE DATE: XXX

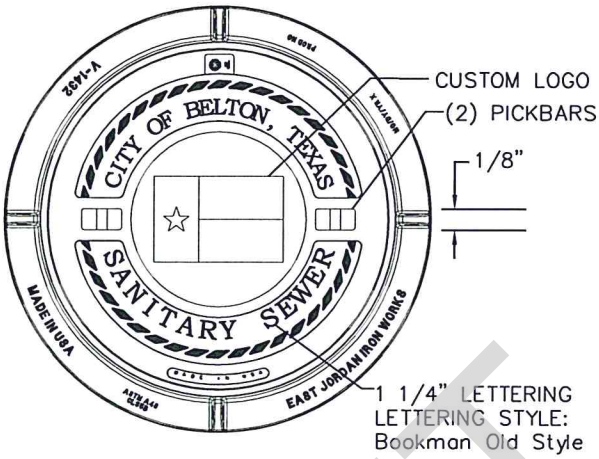

NOTES:

1. LID SHALL HAVE TWO (2) TYPE 4 PICK BARS AND THE CITY LOGO AND LABELED "SANITARY SEWER". NO PICK HOLES IN CASTING.
2. ASPHALTIC COATING FROM MANUFACTURER IS REQUIRED.
3. MUD RING IS REQUIRED.

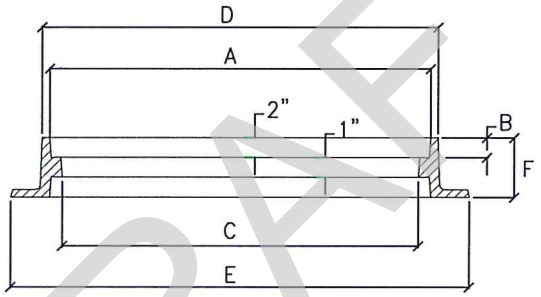

1432 – LID
1480 – RING

DRAFT

DIMENSIONS						TOTAL
A	B	C	D	E	F	WEIGHT
32 3/16	1 1/2	30	33 1/4	40 3/4	4 1/2	345 LBS

CITY OF BELTON, TEXAS
DEPARTMENT OF PUBLIC WORKS

WASTEWATER MANHOLE SET

CONSTRUCTION STANDARDS AND DETAILS

WW-07A
SCALE: N.T.S.
ISSUE DATE: XXX

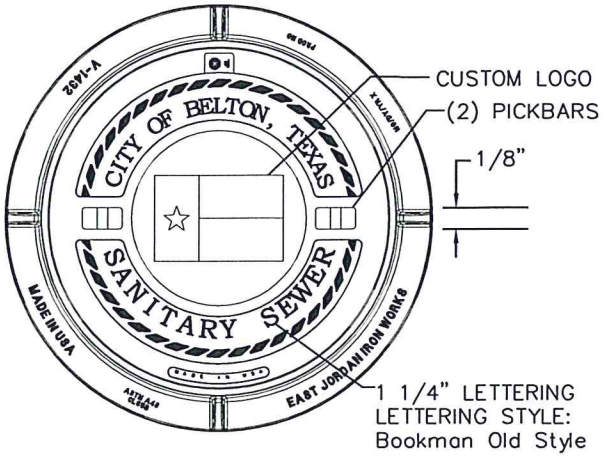

NOTES:

1. LID SHALL HAVE TWO (2) TYPE 4 PICK BARS AND THE CITY LOGO AND LABELED "SANITARY SEWER". NO PICK HOLES IN CASTING.
2. ASPHALTIC COATING FROM MANUFACTURER IS REQUIRED.
3. MUD RING IS REQUIRED.

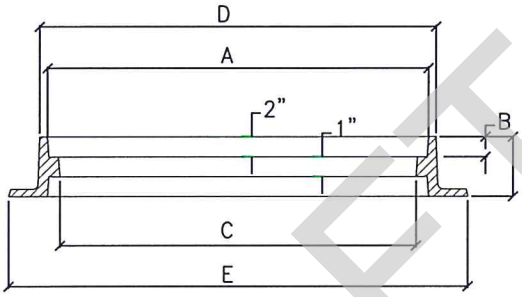

1480 – RING
2432 – WATERTIGHT LID

THE WATER–TIGHT MANHOLE SETS FEATURE 4 STAINLESS STEEL BOLTS IN COUNTERSUNK POCKETS AND A SEALING FLAT GASKET IN THE RING SET. BOLTING PADS REDUCE THE STANDARD CLEAR OPENING BY TWO TO THREE INCHES.

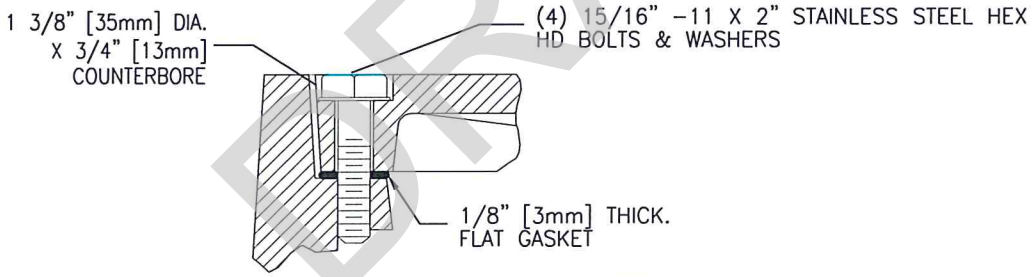

WATER–TIGHT DETAIL

DIMENSIONS						TOTAL
A	B	C	D	E	F	WEIGHT
32 3/16	1 1/2	30	33 1/4	40 3/4	4 1/2	345 LBS

DRAFT

CITY OF BELTON, TEXAS
DEPARTMENT OF PUBLIC WORKS

WASTEWATER
WATER TIGHT MANHOLE SET

CONSTRUCTION STANDARDS AND DETAILS

WW–07B
SCALE: N.T.S.
ISSUE DATE: XXX

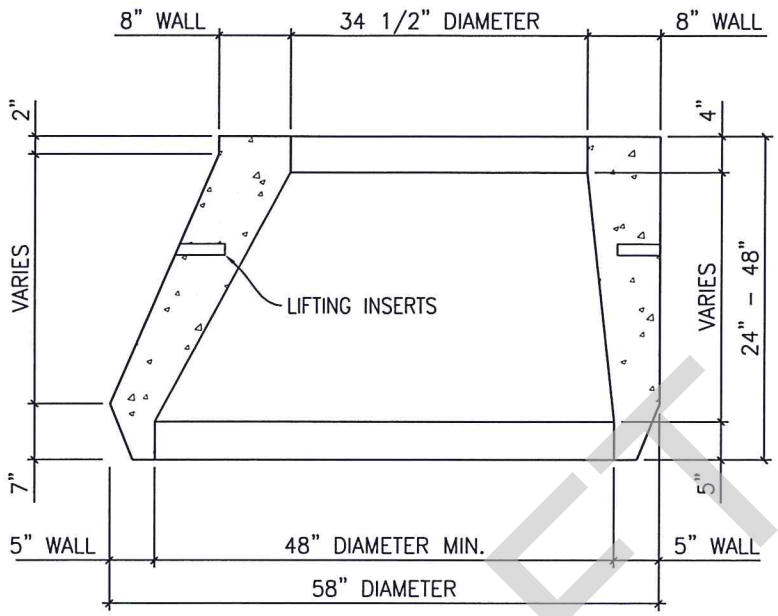

DRAFT

CITY OF BELTON, TEXAS
DEPARTMENT OF PUBLIC WORKS

ECCENTRIC CONCRETE CONE

CONSTRUCTION STANDARDS AND DETAILS

WW-08
SCALE: N.T.S.
ISSUE DATE: XXX

M.F.G. PER ASTM-C478
5000 P.S.I. CONCRETE
TRAFFIC BEARING
JOINT PER C443

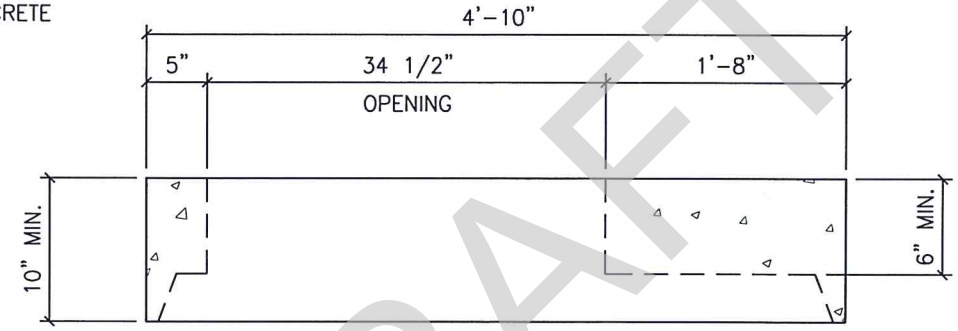

NOTES:

1. AVAILABLE WITH CAST IRON RING AND COVER CAST IN PLACE.
2. PERMITTED ONLY WITH WRITTEN APPROVAL FROM THE CITY ENGINEER.
3. REINFORCEMENT SHALL MEET DESIGN REQUIREMENTS FOR AASHTO HS-20 LOADING.

DRAFT

CITY OF BELTON, TEXAS
DEPARTMENT OF PUBLIC WORKS

48" MANHOLE FLAT LID SECTION

CONSTRUCTION STANDARDS AND DETAILS

WW-09
SCALE: N.T.S.
ISSUE DATE: XXX

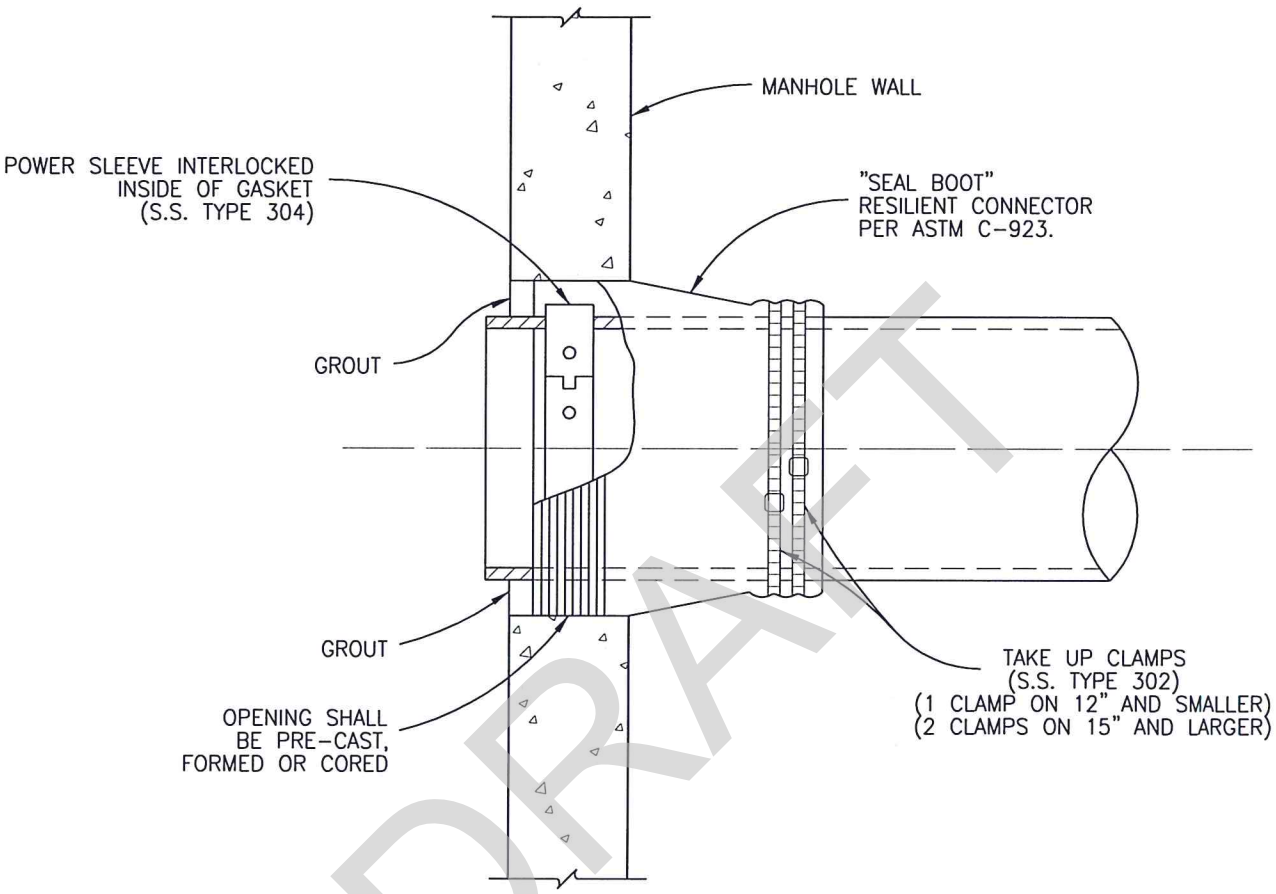

DRAFT

NOTE:

1. INSERT-A-TEE MAY BE USED IN LIEU OF SEAL BOOT FOR FIBERGLASS MANHOLES.

CITY OF BELTON, TEXAS

DEPARTMENT OF PUBLIC WORKS

FLEXIBLE "SEAL BOOT" CONNECTOR

CONSTRUCTION STANDARDS AND DETAILS

WW-10

SCALE: N.T.S.

ISSUE DATE: X

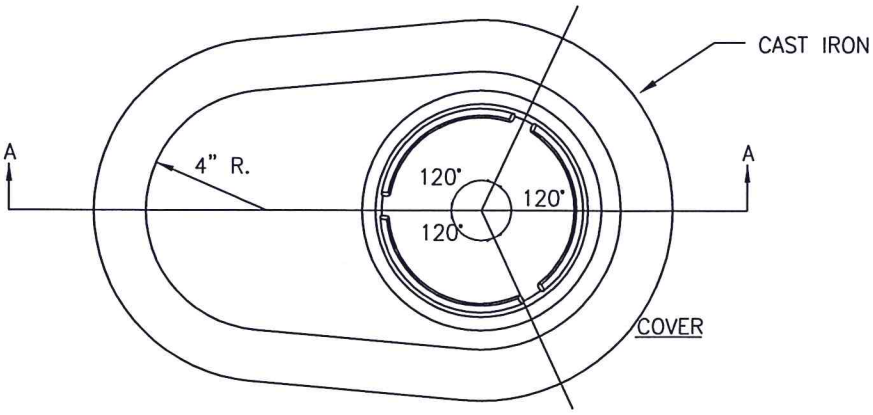

PLAN

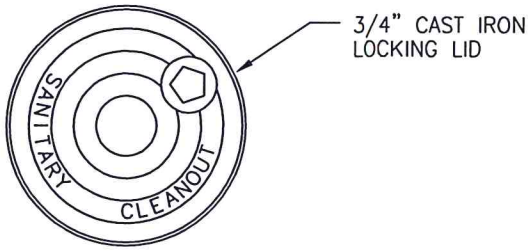

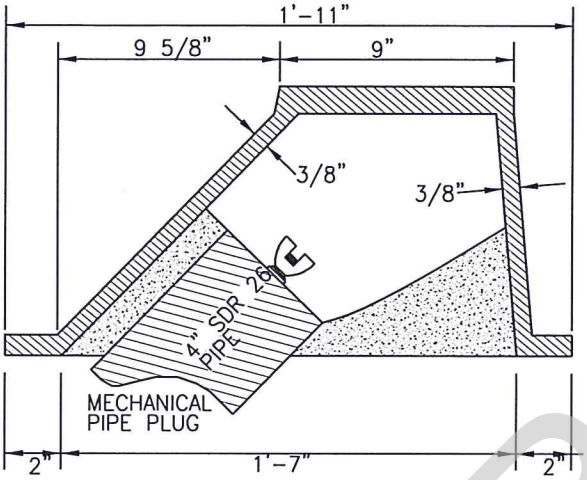

SECTION A-A

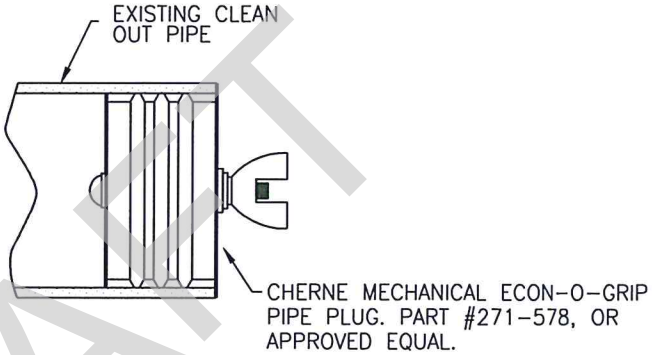

NOTES:

1. CLEANOUT AND FITTINGS SHALL BE 4-INCH MINIMUM.
2. USE 8"x4" REDUCER WHERE SEWER IS 8" IN SIZE.
3. BACKFILL IN AROUND AND OVER CLEANOUT PIPE SHALL BE TAMPED AT 85% MODIFIED PROCTOR OF SOIL.
4. SEWER CLEAN-OUTS ARE ONLY USED WHEN APPROVED BY CITY ENGINEER.

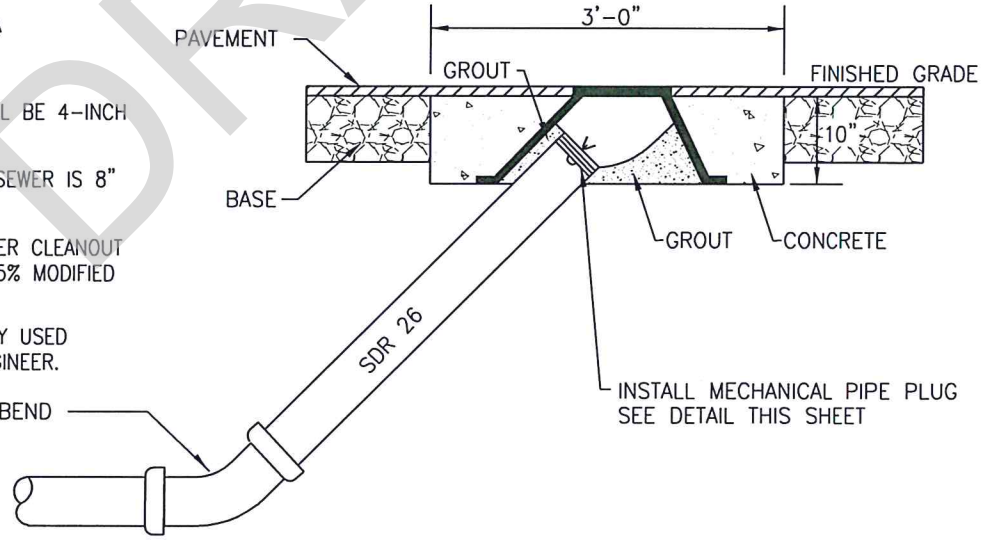

DRAFT

CITY OF BELTON, TEXAS

DEPARTMENT OF PUBLIC WORKS

SEWER CLEAN-OUT
STANDARD FOR SEWER MAINS

CONSTRUCTION STANDARDS AND DETAILS

WW-11
SCALE: N.T.S.
ISSUE DATE: XXX

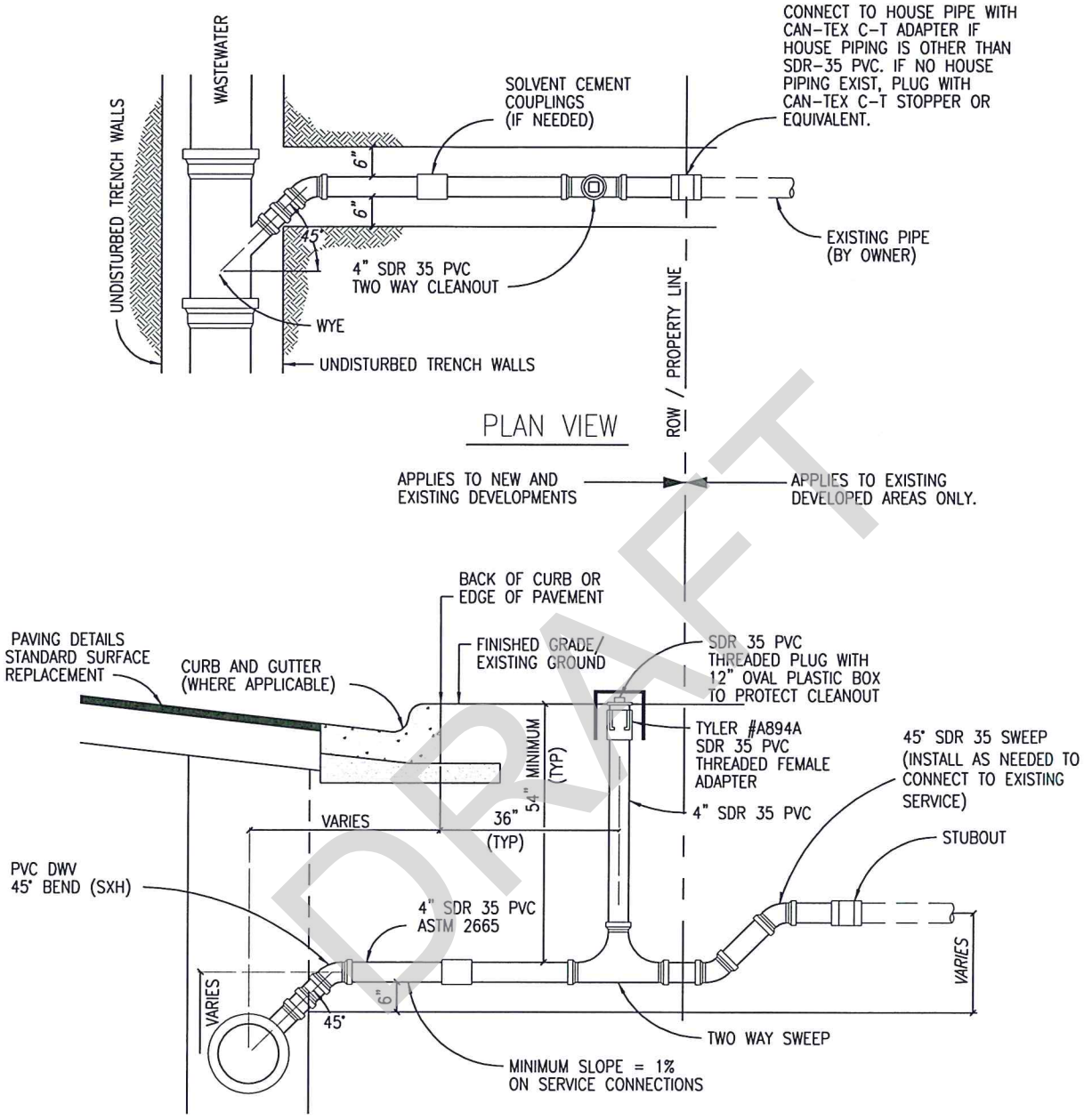

DRAFT

NOTE:
4" IS TYPICAL FOR SINGLE FAMILY HOME. BUSINESS OR INDUSTRY MAY NEED TO BE 6" OR LARGER.

CITY OF BELTON, TEXAS
DEPARTMENT OF PUBLIC WORKS

SINGLE WASTEWATER SERVICE CONNECTION

CONSTRUCTION STANDARDS AND DETAILS

WW-12
SCALE: N.T.S.
ISSUE DATE: XXX

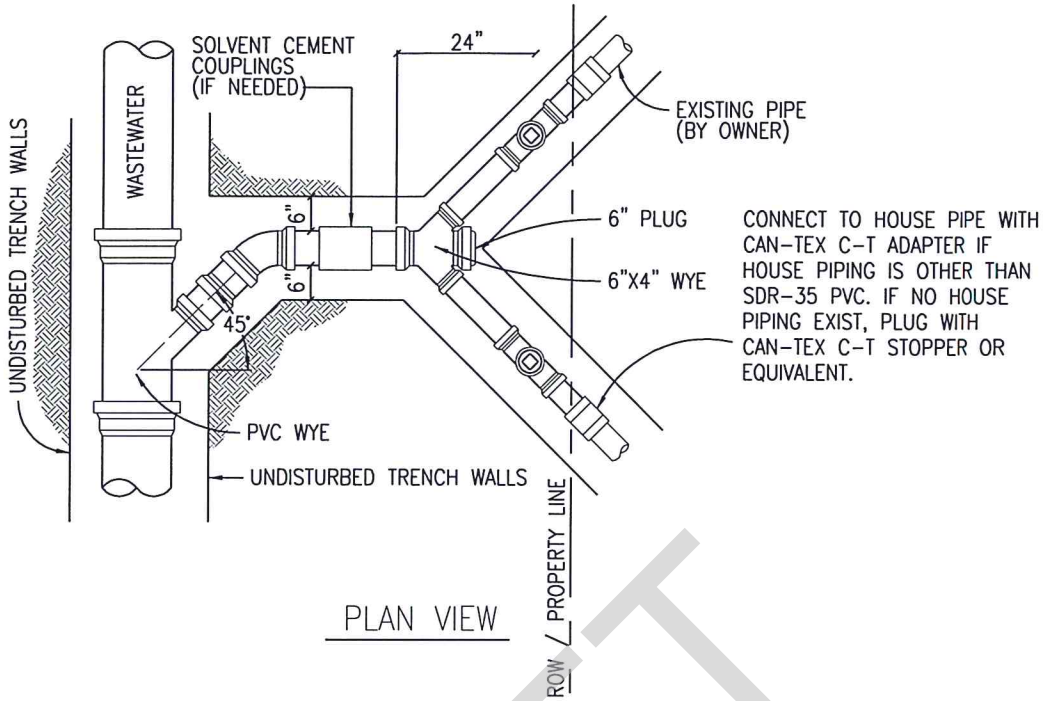

PLAN VIEW

APPLIES TO NEW AND EXISTING DEVELOPMENTS

APPLIES TO EXISTING DEVELOPED AREAS ONLY.

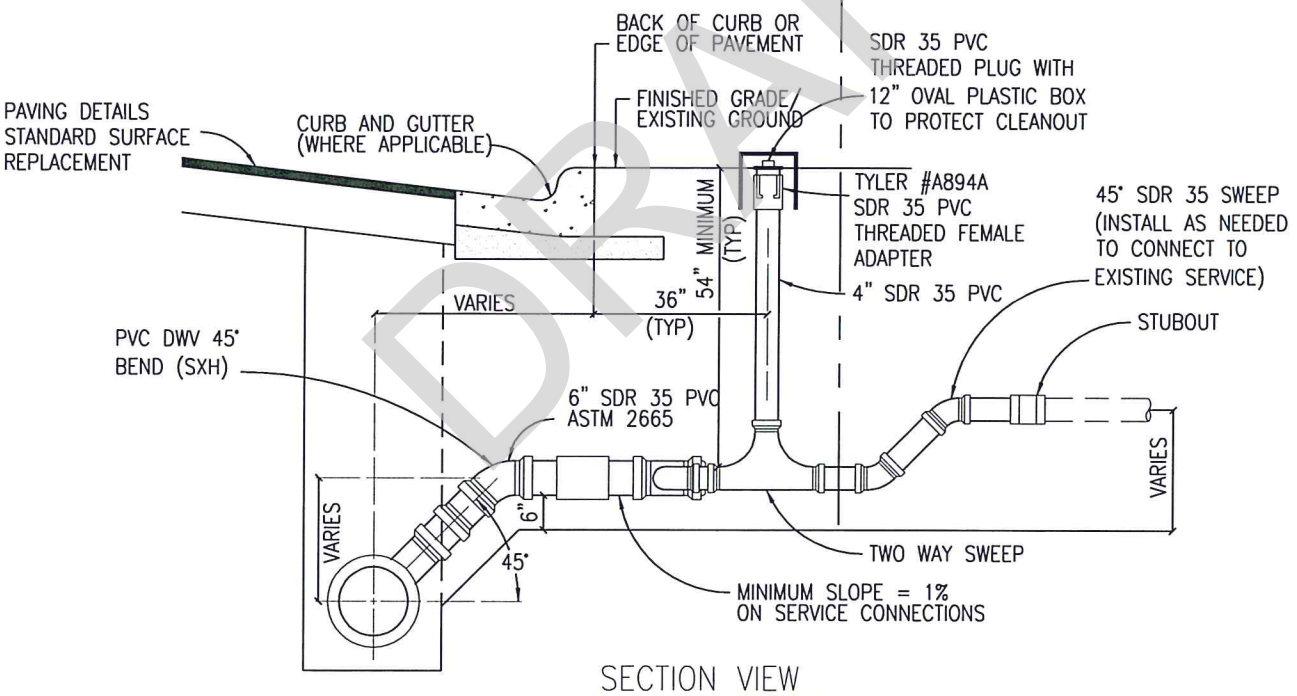

SECTION VIEW

DRAFT

CITY OF BELTON, TEXAS

DEPARTMENT OF PUBLIC WORKS

DUAL WASTEWATER SERVICE CONNECTION

CONSTRUCTION STANDARDS AND DETAILS

WW-13

SCALE: N.T.S.

ISSUE DATE: XXX

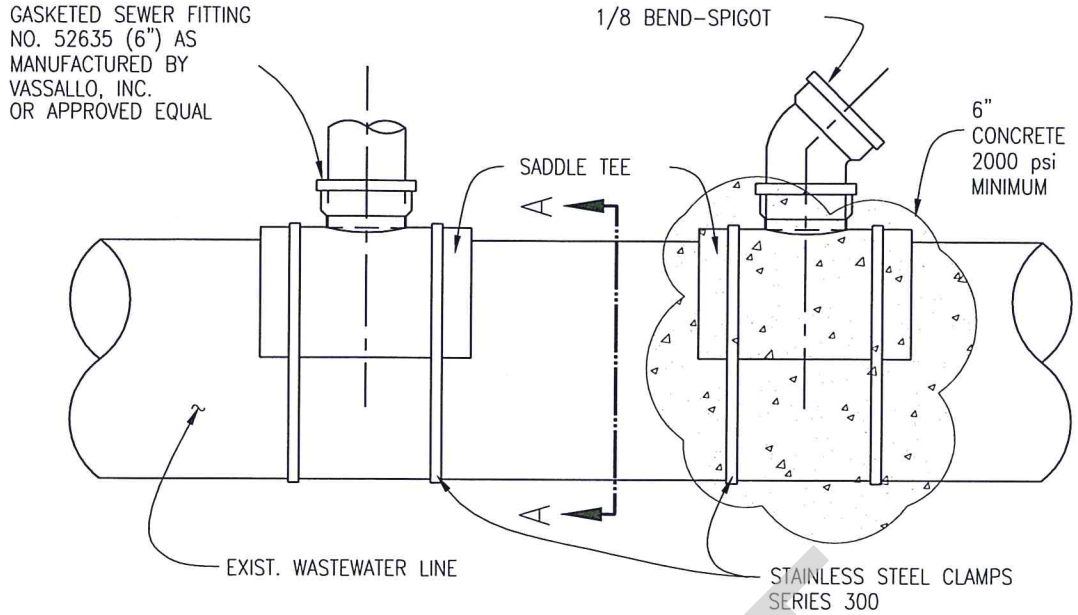

PLAN VIEW

SADDLE TEE				
PART NO.	SIZE	L1	H	P
52635	8"X6"	5.625	5.659	1.448

PLASTIC TRENDS INC. – 1/8 BEND – SPIGOT					
PART NO.	SIZE	A	B	C	D
G 406	6	11.270	6.146	1.870	6.090

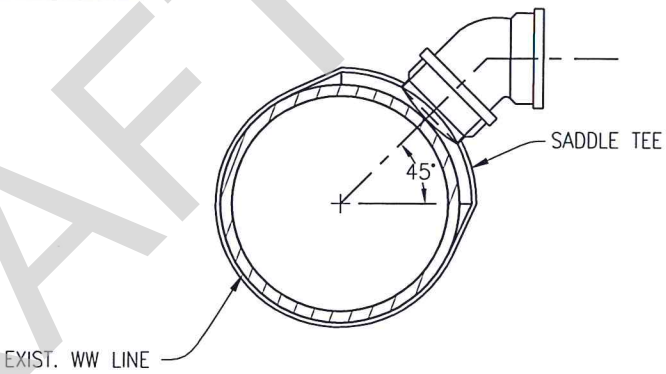

SECTION A–A

NOTES:

1. FLEXIBLE SADDLE TO BE INSTALLED IN ACCORDANCE WITH MANUFACTURER'S REQUIREMENTS.
2. SADDLE TEE SHALL BE ORIENTATED 45° TO MAIN.
3. EXCAVATE AROUND EXISTING 8-INCH PIPE, EXPOSING SUFFICIENT ROOM FOR S.S. CLAMPS.
4. THOROUGHLY CLEAN AND DRY THE MATING SURFACE WITH RAG OR PAPER TOWEL MAKE SURE THEY ARE FREE OF DUST AND MOISTURE.
5. MARK THE SIZE OF THE HOLE TO BE CUT USING THE GASKET SKIRT OR THE SADDLE ITSELF AS THE TEMPLATE.
6. SAW OUT THE SECTION OF THE PIPE WHERE THE SADDLE WILL BE LOCATED, WITH A SABER OR KEY HOLE SAW.
7. TEST TO MAKE SURE SADDLE FITS HOLE PROPERLY.
8. SERVICE PIPE SHALL NOT EXTEND MORE THAN ONE-HALF INCH INTO THE MAIN.
9. PLACE GASKET SKIRT AND SADDLE OVER OPENING AND TIGHTEN BAND CLAMPS EVENLY UNTIL SADDLE IS FIRMLY ATTACHED TO THE PIPE. APPLY PRESSURE ON THE SADDLE AGAINST THE PIPE WHILE TIGHTENING THE CLAMPS AS INDICATED ABOVE. DO NOT OVER TIGHTEN, DO NOT STRIP THREAD.
10. REPLACE THE BEDDING AND BACKFILL IN ACCORDANCE WITH THE TRENCH EMBEDMENT DETAIL.
11. CONCRETE SHALL BE PLACED AROUND SADDLE.

DRAFT

CITY OF BELTON, TEXAS
DEPARTMENT OF PUBLIC WORKS

GASKETED SEWER FITTING FOR SEWER SERVICE CONNECTIONS TO EXISTING MAINS

CONSTRUCTION STANDARDS AND DETAILS

WW-14
SCALE: N.T.S.
ISSUE DATE: XXX